fondital

BE INNOVATIVE

MINORCA
Monothermal

IST 03 C 970 - 04

INSTALLATION, USE AND MAINTENANCE

EN

Translation of the original instructions (in Italian)

Dear Sirs,
thank You for choosing and buying one of our products. Please read these instructions carefully in order to properly install, operate, and maintain the product.

WARNING

- **Boilers shall be installed by an authorised company under the requirements set forth by the prevailing rules, in full compliance with the prevailing regulations and standards.**
- **Anyone entrusting installation to an unqualified installer will be subject to administrative sanctions.**
- **Boilers must be maintained by qualified personnel only, under the requirements set forth by the prevailing rules.**

We hereby inform you that certain models, versions and/or accessories relevant to the products this manual refers to, might not be available in some countries.

Therefore, it is recommended to contact the manufacturer or the importer in order to get the necessary information about the actual availability of such models, versions and/or accessories.

The manufacturer reserves the right to modify the products and/or its components as deemed necessary, in any moment and without prior notice.

This instruction manual is available in two languages, Italian and English, without prejudice to the prevalence of Italian language in case of differences in translation and/or dispute on construction of the text.

General notes for installing and maintenance technicians, and users

This instruction manual is an integral and essential part of the product. It shall be supplied by the installer to the user who shall keep it carefully to consult it whenever necessary.

This document shall be supplied together with the equipment in case the latter is sold or transferred to others.

DANGER

This equipment has been manufactured to be connected to a room heating system and to a DHW distribution system.
Any other use shall be considered unsuitable and dangerous for people, animals, and/or property.

The equipment shall be installed in compliance with the prevailing standards and in accordance with the manufacturer's instructions specified in this manual: the manufacturer will not be held responsible for injuries to people and animals and/or damages to property resulting from an incorrect installation.

Damage and/or injury caused by incorrect installation or use and/or damage and/or injury due to non-observance of the manufacturer’s instructions shall release the manufacturer from any and all contractual and extra-contractual liability.

Before installing the boiler, check that the technical data correspond to the requirements for its correct use in the system.

Check that the boiler is intact and it has not been damaged during transport and handling. Do not install equipment which is clearly damaged and/or faulty.

Do not obstruct the air intake openings.

Only original accessories or optional kits (including the electric ones) are to be installed.

Properly dispose of the packaging as all the materials can be recycled. The packaging must therefore be sent to specific waste management sites.

After removing the packaging, make sure that its elements (clips, plastic bags, foam polystyrene etc.) are note left within the reach of children as they are potential hazard sources.

In the event of failure and/or faulty functioning, switch off the boiler. Do not attempt to make repairs: contact qualified technicians.

Original parts must be used for all repairs to the boiler.

Non-observance of the above requirements may affect the safety of the boilers and endanger people, animals and/or property.

This appliance is not intended for use by persons (including children) with reduced physical, sensory or mental capabilities, or lack of experience and knowledge, unless they have been given supervision or instruction concerning use of the appliance by a person responsible for their safety.

Children should be supervised to ensure that they do not play with the appliance.

WARNING

The boiler must be serviced periodically as indicated in the relevant section of this manual.
Appropriate boiler maintenance ensures efficient operation, environment preservation, and safety for people, animals and objects.
Incorrect and irregular maintenance can be a source of danger for people, animals and property.

The user is strongly advised to have the system serviced and repaired by qualified personnel, satisfying all prevailing law requirements, and trained to properly carry out these operations.

In the event of long periods of inactivity of the boiler, disconnect it from the electrical power mains and close the gas cock.

DANGER

With gas fired boilers, take the following measures if you smell gas:

- **Do not turn on or off electric switches and do not turn on electric appliances.**
- **Do not ignite flames and do not smoke.**
- **Close the main gas cock.**
- **Open doors and windows.**
- **Contact a Service Centre, a qualified installer or the gas supply company.**

Never use a flame to locate a gas leak.

The boiler is designed for installation in the countries indicated on the technical data plate: installation in any other country may be a source of danger for people, animals and/or property.

The manufacturer will bear no contractual and tortious liability for failure to comply with all the instructions above.

1. Instructions for the user 8
1.1 Control panel 8
1.2 Interpreting boiler status from display indications 10
1.3 Boiler operation 11
1.4 Boiler shut-down 14
1.5 Maintenance 15
1.6 Notes for the user 15

2. Technical features and dimensions 16
2.1 Technical features 16
2.2 Dimensions 18
2.3 Hydraulic diagram 19
2.4 Operating data 20
2.5 General characteristics 21

3. Instructions for the installer 24
3.1 Installation standards 24
3.2 Choosing where to install the boiler 24
3.3 Positioning the boiler 24
3.4 Installing the boiler 26
3.5 Boiler room ventilation 26
3.6 Air intake and flue gas venting system 26
3.7 Checking combustion efficiency 35
3.8 Connection to gas mains 36
3.9 Hydraulic connections 36
3.10 Connection to electrical mains 37
3.11 Connection to ambient thermostat (optional) 38
3.12 Room temperature installation 38
3.13 Installation of the (optional) external probe and sliding temperature operation 38
3.14 TSP parameters 40
3.15 Filling the system 42
3.16 Starting up the boiler 43
3.17 Available head 43
3.18 Wiring diagram 44
3.19 Adaptation to other gas types and burner adjustment 46

4. Testing the boiler 48
4.1 Preliminary checks 48
4.2 Switching on and switching off 48

5. Maintenance 49
5.1 Maintenance schedule 49
5.2 Combustion analysis 49

6. Malfunctions, possible causes and solutions 50
6.1 Troubleshooting 50

Fig. 1 Control panel 8
Fig. 2 Filler cock 14
Fig. 3 Dimensions. 18
Fig. 4 Hydraulic diagram. 19
Fig. 5 Paper template 25
Fig. 6 0KITCONC00 (100/60 mm) 31
Fig. 7 Dimensions for coaxial pipe 31
Fig. 8 0SDOPPIA13 33
Fig. 9 Dimensions for split pipes. 33
Fig. 10 Air intake and flue gas venting examples 34
Fig. 11 Air intake and flue gas venting example 34
Fig. 12 Examples of flue gas testing points 35
Fig. 13 Connection to gas mains 36
Fig. 14 Thermoregulation curves 39
Fig. 15 Available head 43
Fig. 16 Wiring diagram 44
Fig. 17 SIT 845 47

Tab. 1 Adjustment specifications CTFS 9 20
Tab. 2 Adjustment specifications CTFS 11 20
Tab. 3 Adjustment specifications CTFS 13 20
Tab. 4 Adjustment specifications CTFS 15 20
Tab. 5 Adjustment specifications CTFS 18 20
Tab. 6 Adjustment specifications CTFS 24 20
Tab. 7 General specifications 21
Tab. 8 Combustion specifications CTFS 9 21
Tab. 9 Combustion specifications CTFS 11 22
Tab. 10 Combustion specifications CTFS 13 22
Tab. 11 Combustion specifications CTFS 15 22
Tab. 12 Combustion specifications CTFS 18 22
Tab. 13 Combustion specifications CTFS 24 23
Tab. 14 Table indicating coaxial pipes 100/60 C12 type - CTFS 9-11-13-15-18. 30
Tab. 15 Table indicating coaxial pipes 100/60 C12 type - CTFS 24 30
Tab. 16 Table indicating coaxial pipes 100/60 C32 type - CTFS 9-11-13-15-18. 30
Tab. 17 Table indicating coaxial pipes 100/60 C32 type - CTFS 24 31
Tab. 18 Flue gas venting duct length and diaphragm diameter 80+80 - CTFS 9-11-13-15-18 32
Tab. 19 Flue gas venting duct length and diaphragm diameter 80+80 - CTFS 24 33
Tab. 20 Limits to be set for TSP parameters and default values in relation to boiler type (TSP0) - I 40
Tab. 21 Limits to be set for TSP parameters and default values in relation to boiler type (TSP0) - II 41
Tab. 22 Relationship between "Temperature and Nominal resistance" for temperature probes 45

1. Instructions for the user

1.1 Control panel

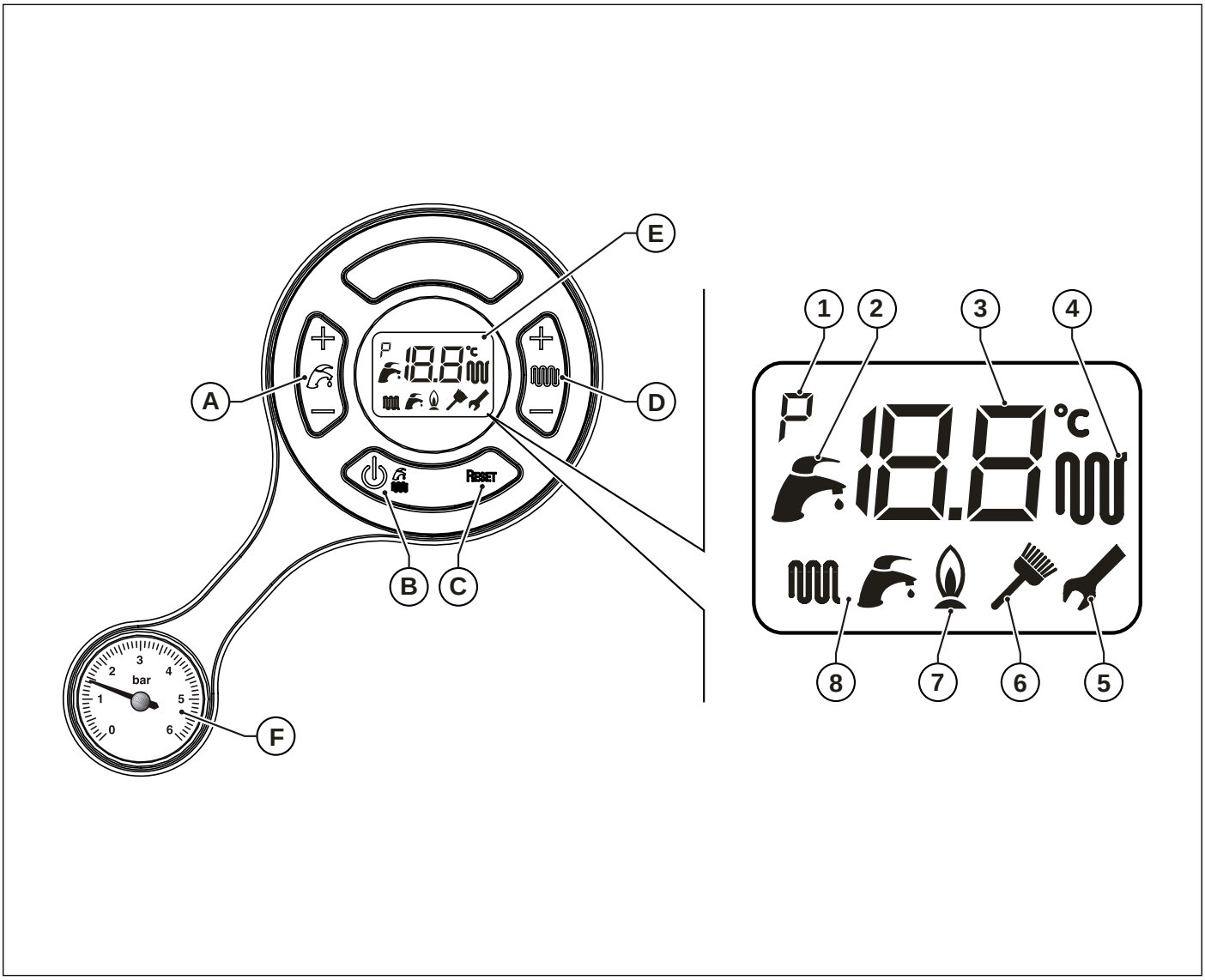

Fig. 1 Control panel

A. Domestic hot water settings **(+/- HOT WATER)**.
B. Select operating status and confirm parameters.
C. Alarm reset and back to the starting page during parameter selection.
D. Domestic heating settings and parameter settings **(+/- HEATING)**.
E. LCD display.
F. Heating system water pressure gauge.

Ref.	Description	Steady on	Flashing
1	Parameter indicator	Indication of "parameter" inside the parameter menu.	Not used.
2	DHW indicator	Boiler is in DHW mode.	Displaying of the DHW temperature set-point.
3	Alphanumeric indicator	Temperature, parameter values and fault indication.	Not used.
4	Central heating indicator	Boiler is in heating mode.	Displaying of the heating temperature set-point.
5	Parameter editing indicator	During parameter editing, the wrench symbol stays on until the set datum is confirmed.	When edited parameter value is confirmed.
6	Flue cleaning function indicator (for the installer)	Flue cleaning function active.	Indicates that you are accessing the flue cleaning function.
7	Flame lighting indicator	Lit flame indication.	Not used.
8	Boiler status indicator	DHW and/or heating function active.	Not used.

1.2 Interpreting boiler status from display indications

1.2.1 Normal operation

Boiler in STANDBY mode

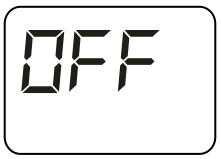

Boiler in SUMMER mode
No active function
Flow temperature displayed

Boiler in WINTER mode
No active function
Flow temperature displayed

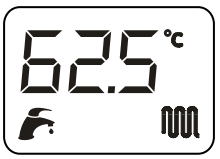

Boiler in CENTRAL HEATING ONLY mode
No active function
Flow temperature displayed

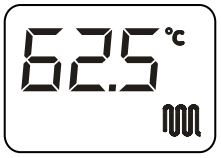

Boiler in SUMMER mode
Domestic hot water withdrawal
DHW temperature displayed

Boiler in WINTER mode
Domestic hot water withdrawal
DHW temperature displayed

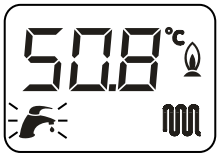

Boiler in WINTER mode
CH function active
Flow temperature displayed

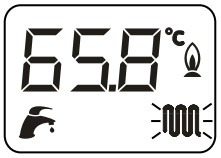

Boiler in CENTRAL HEATING ONLY mode
CH function active
Flow temperature displayed

1.2.2 Malfunction

To identify any malfunctions, refer to paragraph *Troubleshooting* on page 50.

1.3 Boiler operation

1.3.1 Switching on

DANGER

It is presumed that the boiler has been installed by a qualified installer, it has been commissioned and is ready to operate correctly.

- Open the gas shut-off cock.
- Turn the master switch installed ahead of the boiler to ON.
- The display turns on and indicates the function currently active (see *Interpreting boiler status from display indications* on page *10*).
- Select the boiler operating mode: OFF/SUMMER/WINTER/CH ONLY (see *Selecting the operating mode* on page *11*).
- Set desired CH temperature (see *CH function* on page *11*).
- Set desired DHW temperature (see *DHW function* on page *12*).
- Set the desired room temperature on the ambient thermostat inside the home (if installed).
- If the ambient probe or external probe is present, set the desired ambient temperature value.

WARNING

After a prolonged period with the boiler not in use, and with LPG fired boilers in particular, some starting difficulty may be encountered.
Before starting the boiler switch on another gas powered device (e.g. kitchen range).
Beware that even by following this procedure, the boiler might still experience some starting difficulties and shut down once or twice. Press the “RESET” button to restore boiler operation.

1.3.2 Selecting the operating mode

To select the boiler operation mode press **B** Operating mode selection.
Whenever button is pressed, the following modes are enabled in sequence: "SUMMER", "WINTER", "CH ONLY", "OFF".
"SUMMER" operating status
When the "SUMMER" mode is enabled, only the DHW production function is active.
"WINTER" operating status
When the "WINTER" mode is enabled, both DHW and CH functions are active.
"CH ONLY" operating status
When the "CH ONLY" mode is enabled, only the heating water production function is active.
"OFF" operating status
When the "OFF" mode is enabled, no function is active.

1.3.3 CH function

To set the water temperature for central heating, press the **+/- HEATING** buttons.
CH temperature may be set within a range from +35°C to +78°C.
During temperature setting, the symbol flashes on the screen and the CH current temperature setting is displayed.
When the CH system requests heat from the boiler, the LCD displays the CH symbol and the current CH flow water temperature.
The waiting time between one boiler ignition and the following one, used to prevent boiler frequent turning on and off, ranges between 0 and 99 minutes (default value: 4 min.), and can be edited with the **P3** parameter.
Should water temperature in the system fall below set minimum value, between +25° C and +78° C (default value +40°C) to be edited with the **P12** parameter, the waiting time is reset and the boiler re-ignites.
The burner ON symbol shows while the burner is operating.

1.3.4 DHW function

Boiler electronics always gives priority to DHW over CH supply.
To set the domestic hot water temperature, press **DHW +/-** buttons.
The DHW temperature setting range is from +35 °C to +57 °C.

During temperature setting, the symbol flashes on the screen and the DHW current temperature setting is displayed.

The burner ON symbol shows while the burner is operating.

1.3.5 Freeze protection function

This boiler is fitted with a freeze protection system, which works when the following functions are activated: OFF/SUMMER/WINTER/ CH ONLY.

DANGER

The freeze protection function only protects the boiler, not the whole heating system.

The central heating system can be effectively protected against icing by using specific anti-freeze products that are suitable for multi-metal systems.

WARNING

Do not use anti-freeze products for car engines, and check the effectiveness of the product used over time.

In case burner cannot be ignited due to the lack of gas, the freeze protection functions are anyway enabled through the circulation pumps.

1.3.5.1 Flow freeze protection function

When the heating water temperature sensor detects a water temperature of +5 °C, the boiler switches on and stays on at its minimum heat output until the temperature reaches +30 °C or 15 minutes have elapsed.
The pump continues to operate even if the boiler shuts down.

1.3.5.2 DHW plate exchanger freeze protection function

When the DHW temperature sensor detects a water temperature of +5°C, the boiler switches on and stays on at its minimum heat output until the DHW temperature reaches +10°C or 15 minutes have elapsed (the deviating valve is in the DHW position).

During the DHW freeze protection operation the temperature detected by the flow probe is constantly checked, and in case it reaches +60 °C the burner is switched off.

The burner is switched on again if the operation request in anti-freeze mode is still present and the flow temperature is below +60°C.

The pump continues to operate even if the boiler shuts down.

1.3.5.3 Ambient probe freeze protection function

If the ambient probe detects a temperature below +5°C, a heating request to heat the probe-controlled room is launched.

The heating function ends when the probe ambient temperature reading reaches +6°C.

1.3.6 Anti-seize function

If the boiler remains inactive and connected to the power mains, the circulation pump and the deviating valve will be shortly enabled every 24 hours (default time: 10 seconds, that can be changed with parameter **P22**) so as to avoid any shut-down.

1.3.7 Timed post-circulation function

After each central heating, DHW or freeze protection request, the pump continues to be powered for 30 seconds.

If a new central heating, DHW or freeze protection request is received during this period, the post-circulation function is cancelled in order to fulfil the request.

1.3.8 Timed post-circulation function

After each central heating, DHW or freeze protection request, the fan continues to work for 10 seconds.

If a new operating request is received during this period, the post-ventilation function is cancelled in order to fulfil the request.

1.3.9 Operation with ambient probe

The boiler can be connected to sensor for room temperature measurement (supplied as standard).

Once the ambient temperature value is known, the boiler automatically regulates the heating water temperature, increasing it as the ambient temperature decreases and decreasing it when the ambient temperature gets close to the set temperature.

Heating water temperature varies based on a programme written inside boiler electronic microprocessor.

When the ambient probe is connected, the **+/- CH** buttons are no longer used to set heating water temperature, but to edit ambient temperature.

During temperature setting, the **°C** icon flashes on the display and the value being set is shown.

As soon as button is released, icon will continue flashing for approx. 3 seconds, and set value will flash as well.

After this time, value is stored and display standard operation will be restored.

To connect the ambient probe see *Room temperature installation* on page *38*.

WARNING

Only original ambient temperature probes supplied by the manufacturer must be used.

The use of non-original ambient probes, not supplied by the manufacturer, may affect the operation of the ambient probe itself and of the boiler.

1.3.10 Operation with external probe (optional)

Boiler can be connected to a probe measuring the external temperature (optional - not compulsory, supplied by the manufacturer)

Once the external temperature value is known, the boiler will automatically adjust the heating water temperature: increasing it as the external temperature decreases and decreasing it as the external temperature increases. This will both improve room comfort and reduce fuel consumption. Standard and reduced range max. temperature values will nevertheless be respected.

This boiler operating mode is called "sliding temperature operation".

Heating water temperature varies based on a programme written inside boiler electronic microprocessor.

With an external sensor, the **+/- HEATING** buttons no longer set the heating water temperature, and become buttons for changing the theoretical room temperature desired for the rooms to be heated.

During temperature setting, the **°C** symbol flashes on the display and the value being set is shown.

For optimal curve adjustment, a position close to +20 °C is recommended.

For further details on "cruising temperature operation", refer to paragraph *Installation of the (optional) external probe and sliding temperature operation* on page *38*.

WARNING

Only original external temperature probes supplied by the manufacturer must be used.

The use of non-original external probes, not supplied by the manufacturer, may affect the operation of the external probe itself and of the boiler.

1.4 Boiler shut-down

The boiler shuts down automatically if a malfunction occurs.
To determine the possible causes of malfunction, see *Troubleshooting* on page *50*.
Below is a list of shut-down types and the procedure to follow in each case.

1.4.1 Burner shut-down

Fault code **E01** is displayed flashing on the display in the event of burner shut-down due to missing flame.
If this happens, proceed as follows:

- check that the gas cock is open and light a kitchen gas ring for example to check the gas supply;
- once having checked if the fuel is available, press the **Reset** button to restore burner operation: if, after two starting attempts, the boiler still fails to start and enters the shut-down mode again, contact a service centre or qualified personnel for maintenance.

WARNING

If the burner shuts down frequently, there is a recurring malfunction, so contact a service centre or a qualified service engineer.

1.4.2 Shut-down due to overheating

Fault code **E02** is shown on the LCD display in the event of flow water temperature overheating. Contact a service centre or a qualified service engineer to carry out the maintenance.

1.4.3 Shut-down due to incorrect air/flue gas system draught

The boiler is equipped with a safety device for flue gas exhaustion check.
Should an air/flue gas system malfunction occur, the control device will shut-down the boiler by interrupting the gas supply to the boiler and the LCD will display the code:
This cut-off can be reset by pressing the **Reset** button (see Fig. 1 Control panel on page *8*).
In case of repeated stops, it is necessary to have the boiler and the air intake/flue gas venting ducts checked by a service centre or a qualified service engineer.

1.4.4 Shut-down due to low water pressure

Fault code **E04** is displayed on the LCD display in the event of shut-down triggered by the water pressure switch.
Fill the system by working on filler cock (A) (see Fig. 2 Filler cock).
Water pressure must be 1÷1.3 bars while the boiler is cold.
In order to restore water pressure, proceed as follows:

- Turn the filler cock anticlockwise to allow water to enter the boiler;
- Keep the filler cock open until the pressure gauge shows a value of 1÷1.3 bar;
- Turn cock clockwise to close it.

Should boiler shuts down frequently occur it means there is boiler malfunction in progress. Contact qualified personnel or an authorised service centre for maintenance.

DANGER

Make sure you close filler cock carefully after filling procedure is completed.
If you do not, when the pressure increases, the safety valve may activate and discharge water.

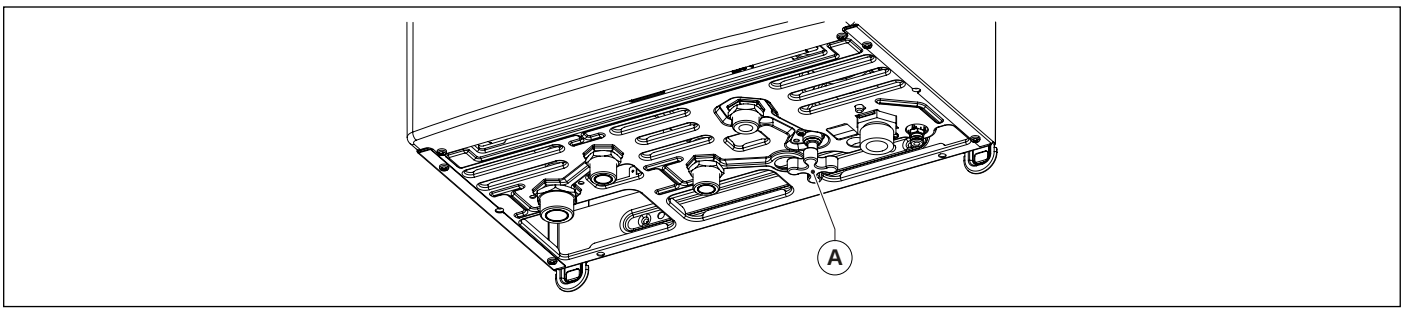

Fig. 2 Filler cock

1.4.5 Alarm due to temperature probe malfunction

The following fault codes are shown on the display in the event of burner shut-down due to a temperature probe fault:

- **E05** in this case, the boiler does not work.
- **E06** in this case, the boiler functions in central heating mode only, and the DHW function is disabled.
- **E15** for the return probe; in this case the boiler functions normally.
- **E44** for the ambient probe/external probe; in this case the boiler works as usual. The operation with ambient/external probe is disabled.

WARNING

In any case, contact a service centre or qualified personnel for maintenance.

1.5 Maintenance

WARNING

The boiler must be serviced periodically as indicated in the relevant section of this manual.

Appropriate boiler maintenance ensures efficient operation, environment preservation, and safety for people, animals and objects.

Boilers must be maintained by qualified personnel only, under the requirements set forth by the prevailing rules.

1.6 Notes for the user

WARNING

The user may only access parts of the boiler that can be reached without using special equipment or tools. The user is not authorised to remove the boiler casing or to operate on any internal parts.

No one, including qualified personnel, is authorised to modify the boiler.

The manufacturer shall not be held responsible in case of damage to people, animals, or property due to failure to follow the above mentioned instructions.

If the boiler remains inactive and the power supply is switched off for a long time, it may be necessary to reset the pump.

This involves removing the casing and accessing internal parts, so it must only be carried out by suitably qualified personnel.

Pump failure can be avoided by adding to the water filming additives suitable for multi-metal systems.

2. Technical features and dimensions

2.1 Technical features

The boiler is equipped with an integrated gas atmospheric burner. The following models are available:

- **CTFS** sealed chamber, forced draught boiler with electronic ignition for heating and instantaneous DHW supply.
- **RTN** open chamber, natural draught boiler with electronic ignition for heating only.
- **RBTN** natural draught, open chamber boiler with electronic ignition, CH only, with 3-way valve for connection to external water heater (optional).

The following power rates are available:

- **CTFS 9**: with heat input of 10.4 kW
- **CTFS 11**: with heat input of 12.3 kW
- **CTFS 13**: with heat input of 14.2 kW
- **CTFS 15**: with heat input of 16.4 kW
- **CTFS 18**: with heat input of 20.0 kW
- **CTFS 24**: with heat input of 25.5kW

All models are equipped with electronic ignition and ionisation flame sensing device.
The boilers meet local applicable Directives enforced in the country of destination, which are stated on their rating plate.
Installation in any other country may be a source of danger for people, animals and property.
The key technical features of the boilers are listed below.

2.1.1 Manufacturing characteristics

- IPX4D electrically protected control panel.
- Integrated, modulating electronic safety board.
- Electronic ignition and ionisation flame detection device.
- Stainless steel, atmospheric burner that can run on several gases.
- Mono-thermal, high performance, aluminium heat exchanger.
- Twin shutter modulating gas valve.
- CH circulation pump with built-in air purging device.
- Safety pressure switch, preventing low water pressure operation.
- Air pressure switch
- Integrated, automatic by-pass.
- 6 litre expansion vessel.
- System filler cock.
- System water discharge tap.
- Heating flow water temperature probe.
- Heating return water temperature probe.
- Domestic hot water temperature probe.
- Heating flow safety thermostat.
- Stainless steel plate heat exchanger for DHW production.
- Motorised deviating valve.
- DHW priority flow switch.
- 8 litre/min DHW flow-limiting device.

2.1.2 User interface

- Liquid crystal LCD interface showing the boiler operating status: OFF, SUMMER, WINTER and CH ONLY.
- CH water temperature setting buttons: 35-78 °C.
- DHW temperature setting buttons: 35-57 °C.
- System water pressure gauge.

2.1.3 Operating features

- Electronic flame modulation in CH mode, with timed rising ramp.
- Electronic flame modulation in DHW mode.
- Flow freeze protection function: ON 5°C; OFF 30°C or after 15 minutes of operation if CH temperature > 5 °C.
- DHW freeze protection function (CTFS): ON 5°C; OFF 10 °C or after 15 minutes of operation if DHW temperature > 5 °C.
- Timer-controlled flue cleaning function: 15 minutes.
- CH Maximum heat input parameter adjustment.
- Ignition heat input adjustment parameter.
- Ignition flame propagation function.
- CH thermostat timer: 4 minutes (adjustable).
- Heating pump post-circulation function in CH, freeze protection and flue cleaning modes: 30 seconds (adjustable).
- DHW post-circulation function: 30 seconds.
- Post-circulation function for heating temperature > 78 °C: 30 seconds.
- Post-ventilation function after working: 10 seconds.
- Post-ventilation function for heating temperature > 95°C.
- Circulation pump and deviating valve anti shut-down function: 10 seconds of operation after 24 hours of inactivity.
- Ready for connection to an (optional) ambient thermostat.
- Ready for operation with an ambient probe (optional, supplied by the manufacturer).
- Ready for operation with an external probe (optional, supplied by the manufacturer).
- Anti-water hammer function: can be set from 0 to 10 seconds.
- DHW function priority.

2.2 Dimensions

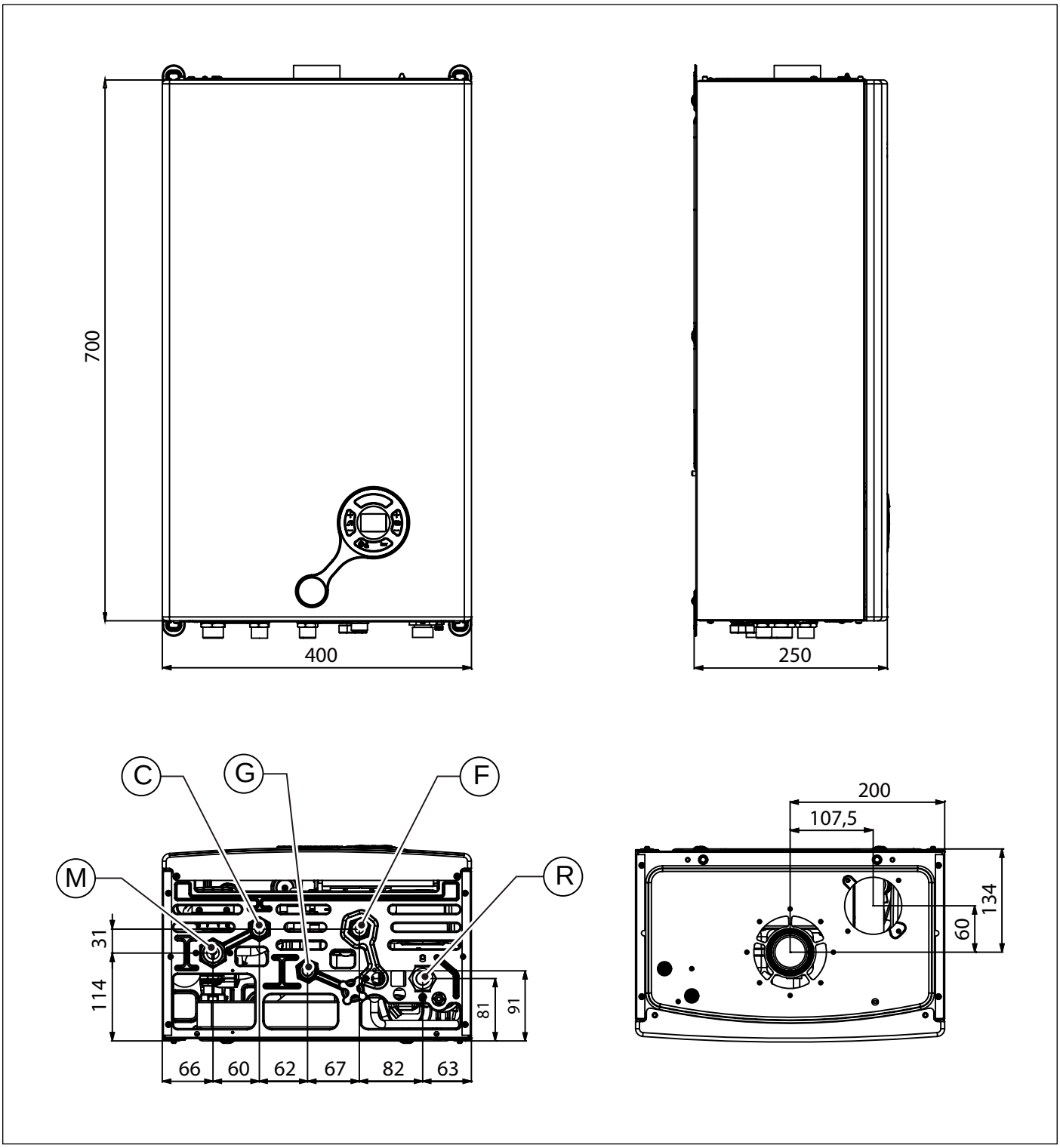

Fig. 3 Dimensions

M CH system flow (3/4”)
C DHW outlet (1/2")
G Gas inlet (1/2”)
F Cold water inlet (1/2")
R CH system return (3/4”)

2.3 Hydraulic diagram

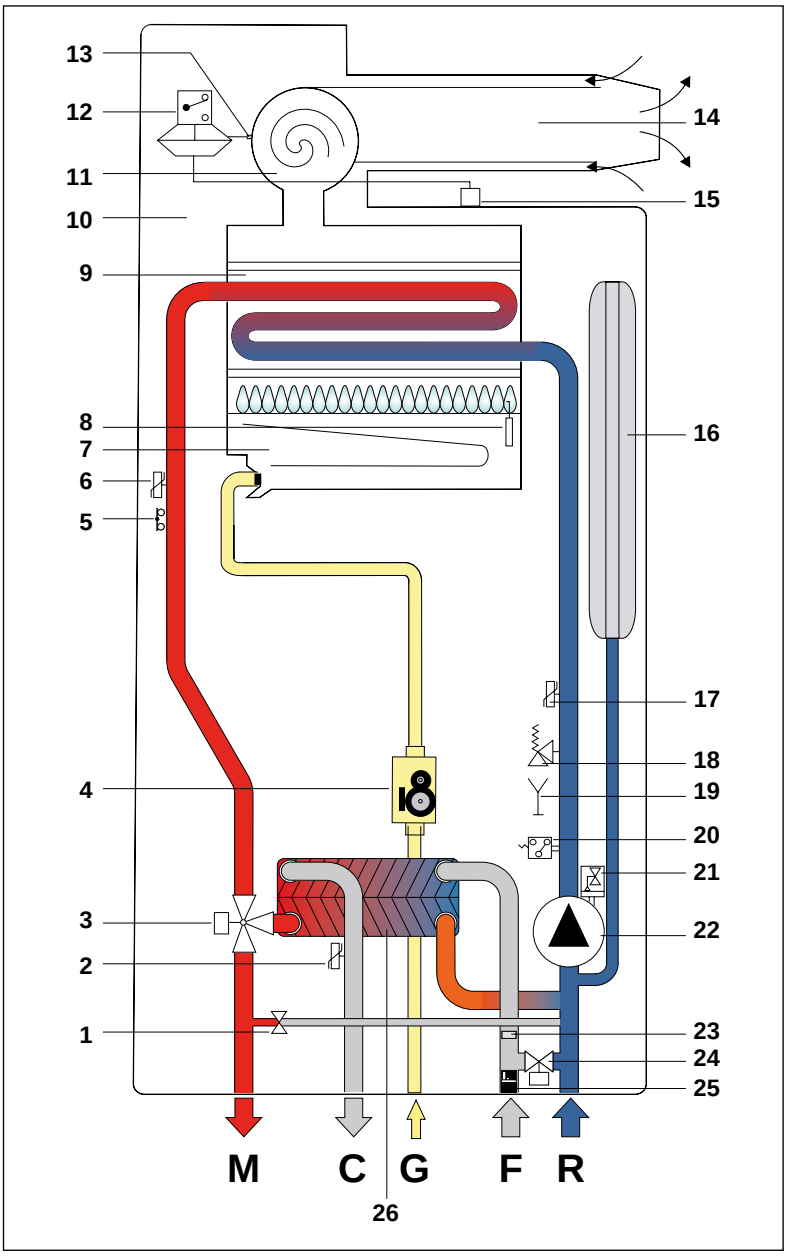

M	CH system flow
C	DHW outlet
G	Gas inlet
F	Cold water inlet
R	CH system return

Fig. 4 Hydraulic diagram

1. Automatic by-pass
2. DHW temperature probe
3. Motorised 3-way valve
4. Modulating gas valve
5. Safety thermostat on CH flow
6. CH flow water probe
7. Burner
8. Ignition/detection electrode
9. Mono-thermal heat exchanger
10. Sealed combustion chamber
11. Flue gas extraction fan
12. Flue gas circuit safety pressure switch
13. Pressure testing point on flue gas duct
14. Air intake and flue gas venting duct
15. Pressure testing point on flue gas duct
16. Expansion vessel
17. CH return water temperature probe
18. 3-bar safety valve
19. System unloading cock.
20. Minimum pressure switch
21. Air-purging device
22. Circulation pump
23. 8 l/min flow-limiting device
24. Filler cock
25. Cold water flow switch with filter
26. Secondary plate exchanger

2.4 Operating data

Burner pressures reported in the following page must be verified after the boiler has been operating for 3 minutes.

Gas category: II2H3+

Fuel	Gas mains pressure [mbar]	Nozzle [mm]	Min pressure at the burner [mbar]	Max pressure at the burner Heating [mbar]	Max pressure at the burner DHW [mbar]
Natural gas G20	20	1,20	1,5	3.2	11,1
Butane gas G30	29	0,70	3,9	8.1	28,3
Propane Gas G31	37	0,70	5,1	10,7	35,9

Tab. 1 Adjustment specifications CTFS 9

Fuel	Gas mains pressure [mbar]	Nozzle [mm]	Min pressure at the burner [mbar]	Max pressure at the burner Heating [mbar]	Max pressure at the burner DHW [mbar]
Natural gas G20	20	1,20	1,5	4.4	11,1
Butane gas G30	29	0,70	3,9	11.3	28,3
Propane Gas G31	37	0,70	5,1	14,5	35,9

Tab. 2 Adjustment specifications CTFS 11

Fuel	Gas mains pressure [mbar]	Nozzle [mm]	Min pressure at the burner [mbar]	Max pressure at the burner Heating [mbar]	Max pressure at the burner DHW [mbar]
Natural gas G20	20	1,20	1,5	5.8	11,1
Butane gas G30	29	0,70	3,9	14.2	28,3
Propane Gas G31	37	0,70	5,1	19,3	35,9

Tab. 3 Adjustment specifications CTFS 13

Fuel	Gas mains pressure [mbar]	Nozzle [mm]	Min pressure at the burner [mbar]	Max pressure at the burner Heating [mbar]	Max pressure at the burner DHW [mbar]
Natural gas G20	20	1,20	1,5	7.6	11,1
Butane gas G30	29	0,70	3,9	19.6	28,3
Propane Gas G31	37	0,70	5,1	25,4	35,9

Tab. 4 Adjustment specifications CTFS 15

Fuel	Gas mains pressure [mbar]	Nozzle [mm]	Min pressure at the burner [mbar]	Max pressure at the burner Heating [mbar]	Max pressure at the burner DHW [mbar]
Natural gas G20	20	1,20	1,5	10,9	11,1
Butane gas G30	29	0,70	3,9	27,6	28,3
Propane Gas G31	37	0,70	5,1	35,9	35,9

Tab. 5 Adjustment specifications CTFS 18

Fuel	Gas mains pressure [mbar]	Nozzle [mm]	Min pressure at the burner [mbar]	Max pressure at the burner Heating [mbar]	Max pressure at the burner DHW [mbar]
Natural gas G20	20	1,35	2,5	11,4	11,4
Butane gas G30	29	0,78	6,1	28,4	28,4
Propane Gas G31	37	0,78	8,0	36,4	36,4

Tab. 6 Adjustment specifications CTFS 24

2.5 General characteristics

Description	um	CTFS 9	CTFS 11	CTFS 13	CTFS 15	CTFS 18	CTFS 24
Burner nozzles	no.	11	11	11	11	11	11
Nominal heat input	kW	10,4	12,3	14,2	16,4	20,0	25,5
Minimum heat input	kW	7,0	7,0	7,0	7,0	7,0	11,5
Max heat output	kW	9,3	11,1	13,0	15,1	18,6	23,3
Minimum heat output	kW	6,0	6,0	6,0	6,0	6,0	9,9
Minimum CH system pressure	bar	0,5	0,5	0,5	0,5	0,5	0,5
Maximum CH system pressure	bar	3,0	3,0	3,0	3,0	3,0	3,0
DHW nominal heat input	kW	20,0	20,0	20,0	20,0	20,0	25,5
DHW minimum heat input	kW	7,0	7,0	7,0	7,0	7,0	11,5
DHW circuit min. pressure	bar	0,5	0,5	0,5	0,5	0,5	0,5
DHW circuit max. pressure	bar	6,0	6,0	6,0	6,0	6,0	6,0
DHW specific flow rate (ΔT=25K)	l/min	11,4	11,4	11,4	11,4	11,4	14,0
DHW specific flow rate (Δt=30K)	l/min	9,5	9,5	9,5	9,5	9,5	11,7
Electric power supply – voltage / frequency	V - Hz	230 - 50	230 - 50	230 - 50	230 - 50	230 - 50	230 - 50
Power mains supply fuse	A	3,15	3,15	3,15	3,15	3,15	3,15
Maximum power consumption	W	120	120	120	120	120	120
Pump absorption	W	84	84	84	84	84	84
Electric protection rating	IP	X4D	X4D	X4D	X4D	X4D	X4D
Natural gas consumption at maximum CH output (Value referred to 15 °C - 1013 mbar)	cu. m/h	1,10	1,30	1,50	1,74	2,12	2,70
Butane gas consumption at maximum CH output	kg/h	0,82	0,97	1,12	1,29	1,58	2,01
Propane gas consumption at maximum CH output	kg/h	0,81	0,96	1,10	1,27	1,55	1,98
Maximum CH working temperature	°C	83	83	83	83	83	83
Maximum DHW working temperature	°C	62	62	62	62	62	62
Total capacity of expansion vessel	l	6	6	6	6	6	6
Maximum recommended system capacity (Maximum water temperature 83°C, expansion vessel pressure 1 bar)	l	100	100	100	100	100	100

Tab. 7 General specifications

Description	um	Max. output	Min. output	30% load
Heat loss from the boiler casing	%	1,59	2,55	-
Flue system heat loss with burner on	%	9,05	11,85	-
Flue system mass capacity	g/s	11,5	12,1	-
Flue temp. – air temp.	°C	101,3	63,9	-
Absolute flue gas temperature upon safety thermostat triggering	°C	143		
CO2 value (methane/butane/propane)	%	3.3 / 3.9 / 3.8	2.1 / 2.5 / 2.5	-
Maximum heat output efficiency rating	%	89,2	85,6	86,2
NOx emission class	-	3		

Tab. 8 Combustion specifications CTFS 9

Description	um	Max. output	Min. output	30% load
Heat loss from the boiler casing	%	1,46	2,55	-
Flue system heat loss with burner on	%	7,90	11,85	-
Flue system mass capacity	g/s	11,5	12,1	-
Flue temp. – air temp.	°C	101,3	63,9	-
Absolute flue gas temperature upon safety thermostat triggering	°C	143		
CO2 value (methane/butane/propane)	%	4.0 / 4.8 / 4.5	2.1 / 2.5 / 2.5	-
Maximum heat output efficiency rating	%	90,2	85,6	86,9
NOx emission class	-	3		

Tab. 9 Combustion specifications CTFS 11

Description	um	Max. output	Min. output	30% load
Heat loss from the boiler casing	%	1,46	2,55	-
Flue system heat loss with burner on	%	7,32	11,85	-
Flue system mass capacity	g/s	11,5	12,1	-
Flue temp. – air temp.	°C	101,3	63,9	-
Absolute flue gas temperature upon safety thermostat triggering	°C	143		
CO2 value (methane/butane/propane)	%	4.7 / 5.4 / 5.3	2.1 / 2.5 / 2.5	-
Maximum heat output efficiency rating	%	91,2	85,6	87,6
NOx emission class	-	3		

Tab. 10 Combustion specifications CTFS 13

Description	um	Max. output	Min. output	30% load
Heat loss from the boiler casing	%	1,37	2,55	-
Flue system heat loss with burner on	%	6,83	11,85	-
Flue system mass capacity	g/s	11,5	12,1	-
Flue temp. – air temp.	°C	101,3	63,9	-
Absolute flue gas temperature upon safety thermostat triggering	°C	143		
CO2 value (methane/butane/propane)	%	5.6 / 6.5 / 6.3	2.1 / 2.5 / 2.5	-
Maximum heat output efficiency rating	%	91,8	85,6	87,7
NOx emission class	-	3		

Tab. 11 Combustion specifications CTFS 15

Description	um	Max. output	Min. output	30% load
Heat loss from the boiler casing	%	1,55	2,55	-
Flue system heat loss with burner on	%	5,25	11,85	-
Flue system mass capacity	g/s	11,5	12,1	-
Flue temp. – air temp.	°C	101,3	63,9	-
Absolute flue gas temperature upon safety thermostat triggering	°C	143		
CO2 value (methane/butane/propane)	%	7.0 / 8.1 / 7.6	2.1 / 2.5 / 2.5	-
Maximum heat output efficiency rating	%	93,2	85,6	88,2
NOx emission class	-	3		

Tab. 12 Combustion specifications CTFS 18

Description	um	Max. output	Min. output	30% load
Heat loss from the boiler casing	%	1,96	1,70	-
Flue system heat loss with burner on	%	6,84	12,40	-
Flue system mass capacity	g/s	15,4	15,6	-
Flue temp. – air temp.	°C	125,5	95,6	-
Absolute flue gas temperature upon safety thermostat triggering	°C	143		
CO2 value (methane/butane/propane)	%	6,7 / 7,9 / 7,7	2,7 / 3,2 / 3,1	-
Maximum heat output efficiency rating	%	91,2	85,9	87,4
NOx emission class	-	3		

Tab. 13 Combustion specifications CTFS 24

3. Instructions for the installer

3.1 Installation standards

This boiler must be installed in compliance with the laws and standards in force in the country of installation, which are herein considered as entirely transcribed.

To find out about the gas category and technical specifications, refer to operation data and general features specified in the previous pages.

DANGER

Accessories and spare parts for installation and service procedures are to be supplied by the Manufacturer.
Should non original accessories and spare parts be employed, boiler proper performance is not guaranteed.

3.1.1 Packaging

Boiler is shipped in a sturdy cardboard box.

Remove boiler from cardboard box and check its integrity.

The packing materials can be recycled. Disposal must be managed via appropriate waste collection sites.

Keep packaging out of reach of children, as it may be dangerous.

The manufacturer shall not be held responsible in case of damage to people, animals, or property due to failure to follow the above mentioned instructions.

Packaging includes one plastic bag containing:

- boiler installation, use and maintenance manual;
- the template for mounting the boiler on a wall (see Fig. 5 Paper template).
- a room temperature sensor;
- 2 screws and relevant wall blocks for fixing the boiler to the wall;
- 5 diaphragms for flue gas venting: diameters of 38, 40, 41, 42 and 47 mm (CTFS 9, 11, 13, 15, 18);
- 3 diaphragms for flue gas venting: diameters 43, 47 and 49 mm (CTFS 24);

3.2 Choosing where to install the boiler

The following must be taken into account when choosing where to install the boiler:

- indications contained in paragraph *Air intake and flue gas venting system* on page *26* and its sub-paragraphs.
- check the wall for sturdiness, avoiding weak areas.
- do not install the boiler over appliances which may affect boiler operation (e.g. cookers, which produce steam and grease, washing machines etc.).
- do not install boilers in locations with a corrosive or very dusty atmosphere, such as hairdresser salons, laundries etc., as this may severely reduce the lifespan of the components of the boiler.
- avoid installing the air intake terminal in rooms or areas with corrosive or very dusty atmosphere to protect the heat exchanger.

3.3 Positioning the boiler

Each boiler is supplied with a paper template, found inside the packaging (see Fig. 5 Paper template).

The template allows you to ensure that the pipes connected to the CH system, the DHW system and the gas mains, and the air intake/flue gas venting ducts are all laid out correctly during the realisation of the water system and before installation of the boiler.

This template is made of heavy-duty paper and must be fixed, with the help of a level, onto the wall where the boiler is to be mounted.

The template provides all the indications required to drill the boiler mounting holes to the wall, procedure which is done using two screws and wall blocks.

The lower area of the template shows where to mark the exact point at which the couplings are to be positioned for boiler connection to the gas supply pipe, cold water mains supply pipe, hot water outlet, CH flow and return pipes.

The upper area of the template shows where air intake and flue gas ducts are to be positioned.

DANGER

Since the temperature of the walls on which the boiler is mounted and external temperature of coaxial air/flue gas system do not exceed 60°C, no minimum distance from flammable walls is to be accounted for.

For boilers with split air intake and flue gas venting ducts, in the case of proximity with flammable walls and passages through walls, apply insulating material between the wall and the flue gas venting duct.

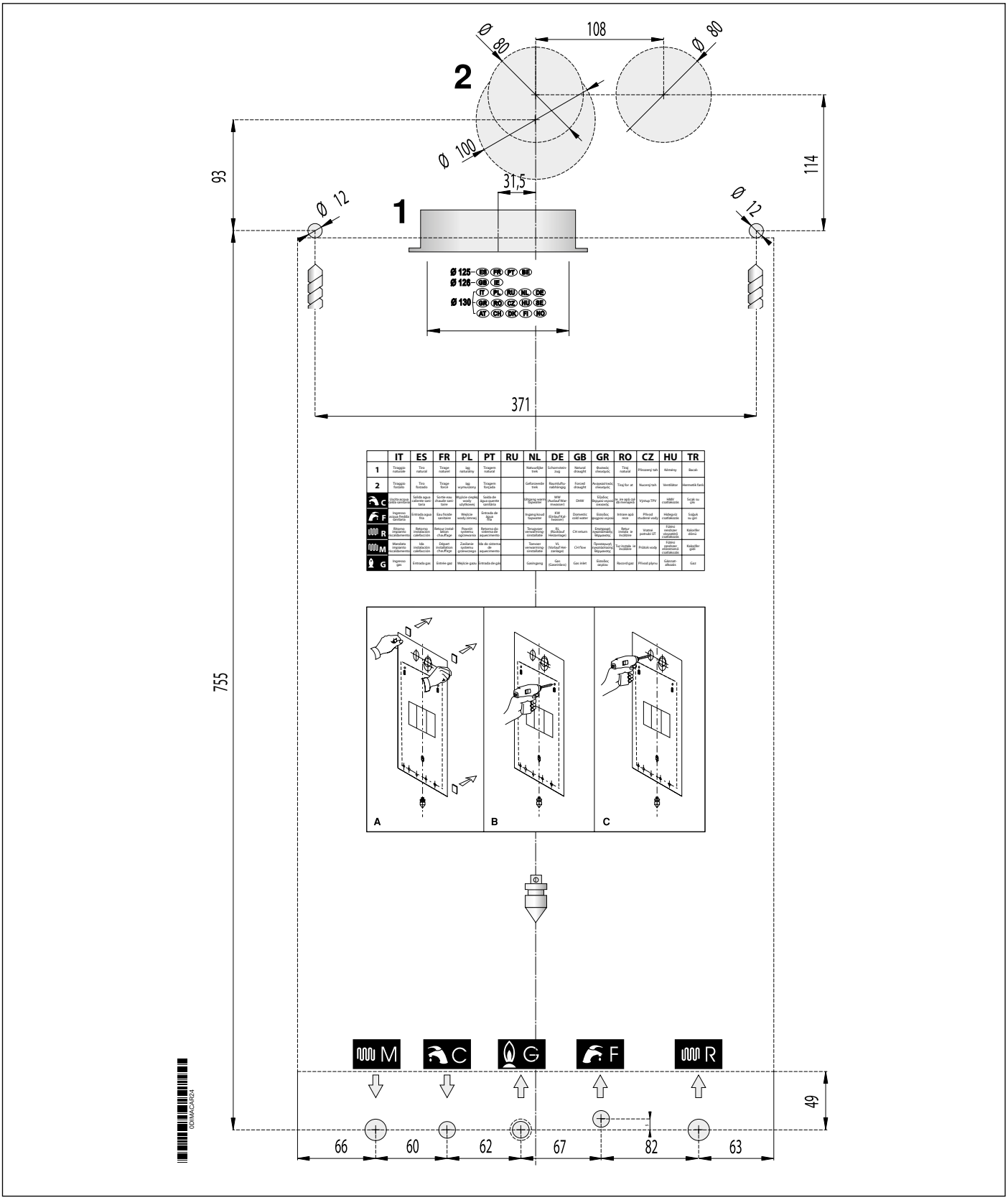

	IT	ES	FR	PL	PT	RU	NL	DE	GB	GR	RO	CZ	HU	TR
1	Tiraggio naturale	Tiro natural	Tirage naturel	Ciąg naturalny	Tiragem natural		Natuurlijke trek	Schornsteinzug	Natural draught	Φυσικός αλκυσμός	Tiraj natural	Přirozený tah	Kémény	Bacalı
2	Tiraggio forzato	Tiro forzado	Tirage forcé	Ciąg wymuszony	Tiragem forçada		Geforceerde trek	Raumluftunabhängig	Forced draught	Αναγκαστικός αλκυσμός	Tiraj for at	Nucený tah	Ventilátor	Hermetik farklı
C	Uscita acqua calda sanitaria	Salida agua caliente sanitaria	Sortie eau chaude sanitaire	Wyjście ciepłej wody użytkowej	Saída de água quente sanitária		Uitgang warm tapwater	WW (Nutzbaf Warmwasser)	DHW	Ξέλιδος (Ηφαίνο νερόν οικιακής)	Ie. ie apă cid de menajeră	Výstup TPV	MWV csatlakozás	Sıcak su çıkı
F	Ingresso acqua fredda sanitaria	Entrada agua fría	Eau froide sanitaire	Wejście wody zimnej	Entrada de fría		Ingang koud tapwater	KW (Kaltbaf Kaltwasser)	Domestic cold water	Ξέλιδος (ψυχρόν νερόν)	Intrare apă rece	Přívod studené vody	Hideguts csatlakozás	Soğuk su giri
R	Ritorno impianto scaldamento	Retorno instalación calefacción	Retour installation chauffage	Powrót systemu ogrzewania	Retorno do sistema de aquecimento		Terugvoer verwarming-sinstallatie	RL (Rückbaf Heizanlage)	CH return	Ελιστροφή (ηφαιτιάτιδος) Πέρμανσης	Retur instalar ie incălzire	Vratné potrubí UT	Fűtési rendszer visszatérő csatlakozás	Kalorifer dönü
M	Mandata impianto scaldamento	Ida instalación calefacción	Départ installation chauffage	Zasilanie systemu ogrzewania	Ida do sistema de aquecimento		Toevoer verwarming-sinstallatie	VL (Vorlaufbaf Heizanlage)	CH flow	Προκοινική (ηφαιτιάτιδος) Πέρμανσης	Tur instalar ie incălzire	Přítok vody	Fűtési rendszer-vezeték csatlakozás	Kalorifer gidi
G	Ingresso gas	Entrada gas	Entrée gaz	Wejście gazu	Entrada de gás		Gasingang	Gas (Gasvorlaufbaf)	Gas inlet	Ξέλιδος αερίου	Racord gaz	Přívod plynu	Gázcsatlakozás	Gaz

Fig. 5 Paper template

3.4 Installing the boiler

DANGER

Before connecting the boiler to CH and DHW networks, clean the pipes carefully.

Before commissioning a NEW system, clean it to remove any metal chips due to machining and welding, and any oil and grease that might negatively affect boiler operation or even damage it in case they get inside it.

Before commissioning a RECONDITIONED system (where radiators have been added, the boiler has been replaced, etc.) thoroughly clean it to remove any sludge and residues.

Clean the system using standard non acid products, available on the market.

Do not use solvents as they could damage system components.

Furthermore, in the central heating system (either new or reconditioned), it is always advisable to add to water a suitable percentage of corrosion protectants for multi-metal systems that will create a protective film onto all internal surfaces.

The manufacturer shall not be held responsible in case of damage to people, animals, or property due to failure to follow the above mentioned instructions.

In order to install the boiler proceed as follows:

- Affix the template to the wall.
- Check that 1 cm to the right and 1 cm to the left of the boiler is left for casing removal;
- Drill two 12 mm diameter holes in the wall for the wall plugs, insert the wall plugs supplied with the boiler and apply and tighten the screws;
- If necessary, provide holes in the wall to allow air intake and/or flue gas venting pipes to pass through it;
- Position the connections for the gas mains pipe **G**, the cold water inlet pipe **F**, the hot water outlet pipe **C**, and the central heating flow **M** and return pipes **R** as indicated at the bottom of the template;
- Hook the boiler to the previously fitted screws;
- Connect the boiler to the feed pipes (see *Hydraulic connections* on page *36*);
- Connect the boiler to the air intake and flue gas venting system (see *Air intake and flue gas venting system* on page *26*);
- Connect power supply, ambient thermostat (when available) and other available accessories (refer to the following paragraphs).

3.5 Boiler room ventilation

The boiler has sealed combustion chamber. Combustion air is not drawn from boiler room, therefore no specific recommendations need to be applied concerning the boiler room or openings and ventilation provided to the boiler room.

DANGER

the boiler must be installed in a room that is compliant with the legislation and standards in force in the country of installation, which are herein considered as entirely transcribed.

3.6 Air intake and flue gas venting system

Flue gas discharge into the atmosphere and air intake/flue gas venting systems must comply with applicable laws and standards in the country of installation that are considered as fully transcribed herein.

When positioning the boiler exhaust terminals onto the wall, comply with the distances specified in the applicable standards and regulations in force in the Country of installation, which are herein considered as entirely transcribed.

DANGER

The boiler is equipped with a safety device for flue gas exhaustion check.

It is strictly forbidden to tamper with and/or prevent operation of such safety device.

Should an air/flue gas system malfunction occur, the device will shut-down the boiler by interrupting the gas supply to the boiler and the LCD will display the E03 code.

In this case it is necessary to have safety device, boiler and the air intake/flue gas venting ducts promptly checked by a service centre or a qualified service engineer.

In case of repeated stops, it is necessary to have safety device, boiler and the air intake/flue gas venting ducts checked by a service centre or a qualified service engineer.

After each operation on the safety device or the air suction/flue gas exhaust system, it is necessary to perform a functional test of the boiler.

In case it is necessary to replace the safety device use only original spare parts supplied by the Manufacturer.

To reset the combustion gas exhaust control device operation it is necessary to press "Reset".

DANGER

Damage and/or injury caused by incorrect installation and/or incorrect use and/or unauthorized changes to the boiler and/or non-observance of the manufacturer's instructions and/or of the relative standards/laws in force in the country of installation, shall release the manufacturer from any and all liability.

3.6.1 Possible configuration of air intake and flue gas venting ducts

Type B22

- Boiler intended for connection to a chimney pipe or a device for flue gas venting external to the boiler room.
- Combustion air is taken directly from the boiler room itself while flue gas is conveyed to the outside.
- The boiler is not to be fitted with anti-wind gust device; it has to be equipped with a fan mounted downstream of the combustion chamber/heat exchanger.

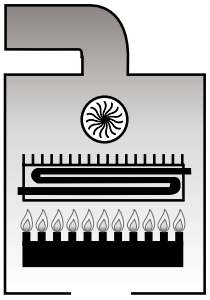

Type C12

- Boiler intended for connection to horizontal outlet and intake ducts connected to the outside by means of coaxial or split ducts.
- The minimum distance between the air intake duct and the flue gas venting duct must be at least 250 mm (see figure opposite), whereas both terminals must be contained within a square measuring 500 x 500mm.

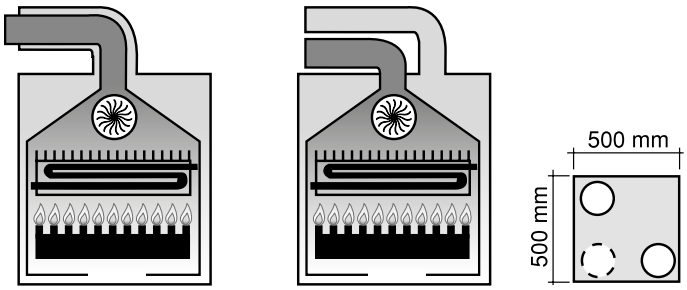

Type C32

- Boiler intended for connection to vertical outlet and intake ducts connected to the outside by means of coaxial or split ducts.
- The minimum distance between the air intake duct and the flue gas venting duct must be at least 250 mm (see figure opposite), whereas both terminals must be contained within a square measuring 500 x 500mm.

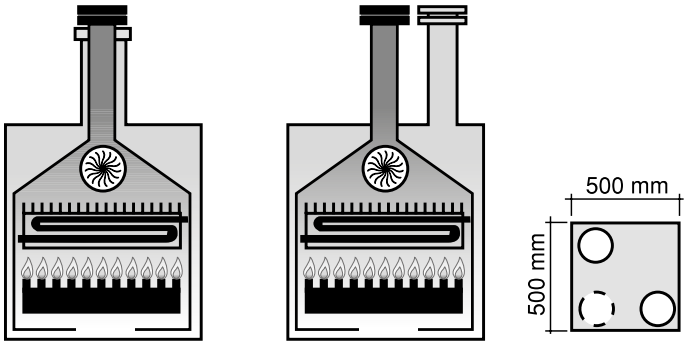

Type C42

- Boiler intended for connection to collective chimney pipe system that includes two ducts, air intake and flue gas venting. These ducts may be coaxial or split.
- The chimney must be compliant with applicable legislation and standards.

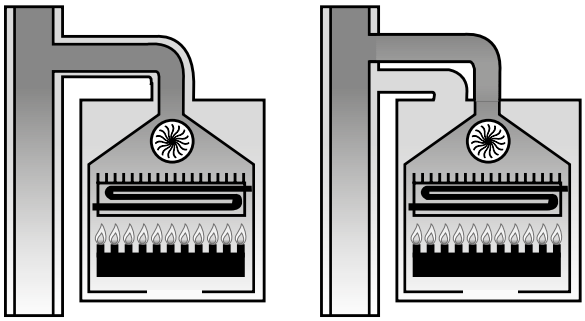

Type C52

- Boiler with separate pipes for combustion air intake and flue gas evacuation.
- These flues may discharge in areas at a different pressure.
- The terminals may not face each other from opposed walls.

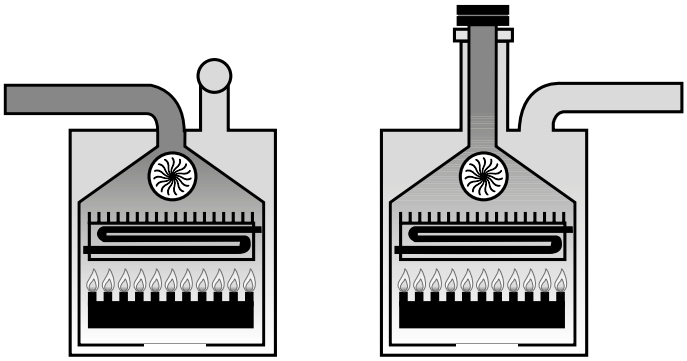

Type C62

- Boiler designed to be sold without air intake or flue gas venting ducts.
- Flue gas venting and air intake to be ensured by using commercially available pipes, which are to be certified separately (in compliance with the legislation and standards in force in the country of installation).

Type C82

- Boiler intended to be connected to combustion air terminal and to a single flue gas terminal or collective chimney.
- The chimney must be compliant with applicable legislation and standards.

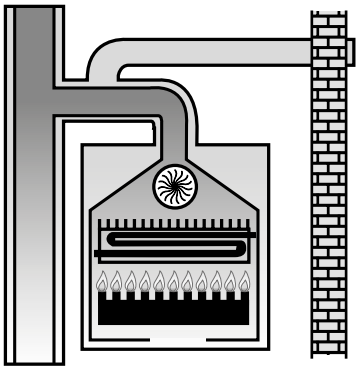

3.6.2 Air intake and flue gas venting via 100/60 mm coaxial pipes

WARNING

The pipe length information refers to air intake/flue gas venting ducts made from smooth, rigid pipes approved and supplied by the manufacturer.

Type C12

CTFS 9 - 11 - 13 - 15 - 18

- Minimum permissible length of horizontal coaxial pipes is 0.5 metres.
- Maximum permissible length of horizontal coaxial pipes is 6 metres.
- For each additional 90° elbow, maximum permissible length is to be reduced by 1 meter.
- For each additional 45° elbow, maximum permissible length is to be reduced by 0.5 meter.
- With "wall-mounted terminal", maximum permissible length is to be reduced by 1 meter.
- The duct is to be tilted down by 1% toward its outlet, to prevent rain water from entering the boiler.

Use the diaphragms supplied with the boiler (see Fig. 6 0KITCONC00 (100/60 mm)).

Pipe length (m)	Flue gas venting diaphragm diameter
0 ≤ L ≤ 1	Ø 38
1 < L ≤ 3	Ø 40
3 < L ≤ 6	Ø 42

Tab. 14 Table indicating coaxial pipes 100/60 C12 type - CTFS 9-11-13-15-18

CTFS 24

- Minimum permissible length of horizontal coaxial pipes is 0.5 metres.
- Maximum permissible length of horizontal coaxial pipes is 5 metres.
- For each additional 90° elbow, maximum permissible length is to be reduced by 1 meter.
- For each additional 45° elbow, maximum permissible length is to be reduced by 0.5 meter.
- With "wall-mounted terminal", maximum permissible length is to be reduced by 1 meter.
- The duct is to be tilted down by 1% toward its outlet, to prevent rain water from entering the boiler.

Use the diaphragms supplied with the boiler (see Fig. 6 0KITCONC00 (100/60 mm)).

Pipe length (m)	Flue gas venting diaphragm diameter
0 ≤ L ≤ 1	Ø 43
1 < L ≤ 3	Ø 47
3 < L ≤ 5	-

Tab. 15 Table indicating coaxial pipes 100/60 C12 type - CTFS 24

Type C32

CTFS 9 - 11 - 13 - 15 - 18

- Minimum permissible length for vertical coaxial pipes is 1 metre, equal to the length of the chimney.
- Maximum permissible length for vertical coaxial pipes is 6 metres, including the chimney.
- For each additional 90° elbow, maximum permissible length is to be reduced by 1 meter.
- For each additional 45° elbow, maximum permissible length is to be reduced by 0.5 meter.
- With "roof-mounted terminal", maximum permissible length is to be reduced by 1.5 meters.

Use the diaphragms supplied with the boiler (see Fig. 6 0KITCONC00 (100/60 mm)).

Pipe length (m)	Flue gas venting diaphragm diameter
0 ≤ L ≤ 1	Ø 38
1 < L ≤ 3	Ø 40
3 < L ≤ 6	Ø 42

Tab. 16 Table indicating coaxial pipes 100/60 C32 type - CTFS 9-11-13-15-18

CTFS 24

- Minimum permissible length for vertical coaxial pipes is 1 metre, equal to the length of the chimney.
- Maximum permissible length for vertical coaxial pipes is 5 metres, including the chimney.
- For each additional 90° elbow, maximum permissible length is to be reduced by 1 meter.
- For each additional 45° elbow, maximum permissible length is to be reduced by 0.5 meter.
- With "roof-mounted terminal", maximum permissible length is to be reduced by 1.5 meters.

Use the diaphragms supplied with the boiler (see Fig. 6 0KITCONC00 (100/60 mm)).

Pipe length (m)	Flue gas venting diaphragm diameter
0 ≤ L ≤ 1	Ø 43
1 < L ≤ 3	Ø 47
3 < L ≤ 5	-

Tab. 17 Table indicating coaxial pipes 100/60 C32 type - CTFS 24

The illustrations are indicative only. When installing accessories, refer to the instructions supplied with the accessories themselves.

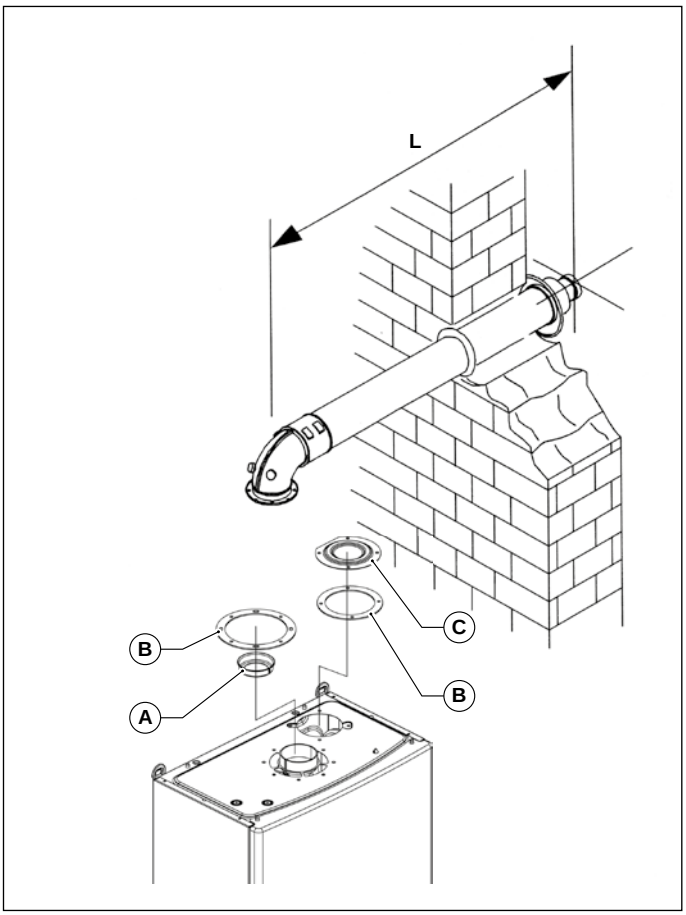

Fig. 6 0KITCONC00 (100/60 mm)

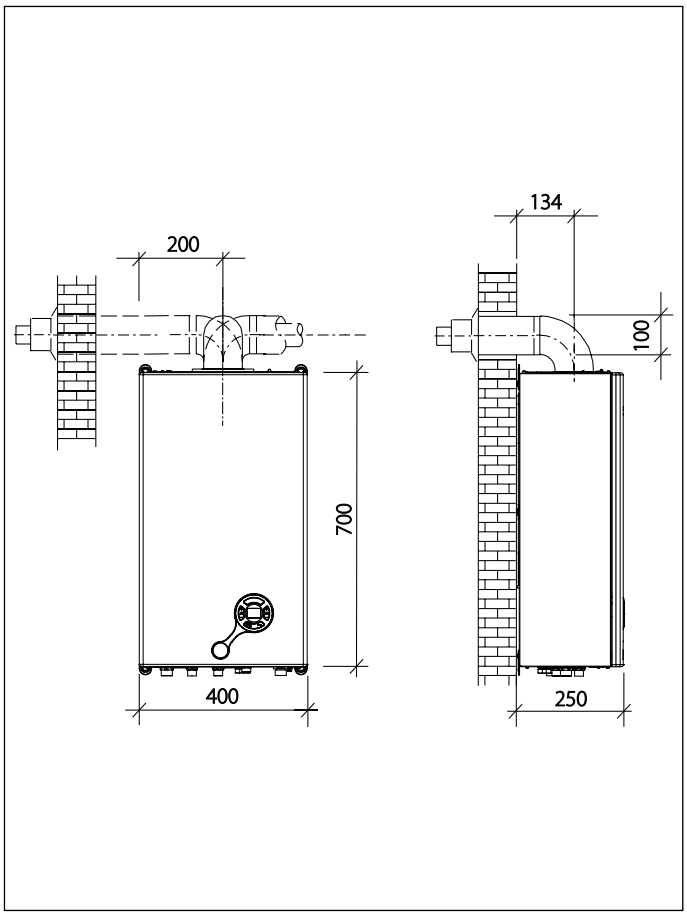

Fig. 7 Dimensions for coaxial pipe

A. Diaphragm
B. Neoprene gasket
C. Blanking cap

3.6.3 Air intake and flue gas venting via Ø 80 mm split pipes

WARNING

The pipe length information refers to air intake/flue gas venting ducts made from smooth, rigid pipes approved and supplied by the manufacturer.

Installation types: C42, C52 and C82

For all systems with separate air intake and flue gas vent pipes, the suitable standard split pipe kit (0SDOPPIA13) must be used, it includes two air deflectors, retaining screws, seals and the following parts:

A. a female flanged stub pipe Ø 80 mm for connecting air intake duct;

B. a female flanged stub pipe Ø 80 mm for connecting flue gas venting duct with relevant deflector;

DANGER

If the original standard split pipe kit is not used, correct boiler operation is not guaranteed.

CTFS 9 - 11 - 13 - 15 - 18

Air intake

- Minimum permissible length of flue gas venting pipe is 0.5 metre.
- Each wide radius 90° air-intake elbow (R=D) is equivalent to a 1.5 metre long straight pipe section.
- Each narrow radius 90° air-intake elbow (R=D) is equivalent to a 2.5 metre long straight pipe section.
- Every air intake pipe length of one metre is equivalent to a 1 metre long straight pipe section.
- Every split pipe chimney at intake is equivalent to a 7.0 metre long straight pipe section.
- The air intake pipe is equivalent to a 4.0 metre long straight pipe section.
- Install the specific air deflector (see Fig. 8 0SDOPPIA13).

WARNING

Install the intake Ø 47 mm diaphragm.

Flue gas vent

- Each wide radius 90° elbow (R=D) in flue gas vent equals to a 1.5 m long straight pipe section.
- Each narrow radius 90° elbow (R<D) in flue gas vent equals to a 2.5 m long straight pipe section.
- Each air intake duct length of one metre is equivalent to a 1 metre long straight pipe section.
- Every split pipe chimney at glue gas vent is equivalent to a 5.5 metre long straight pipe section.

Use the diaphragms supplied with the boiler.

Pipe length (m)	Flue gas venting diaphragm diameter
1 ≤ L ≤ 10	Ø 41
10 < L ≤ 20	Ø 47
20 < L ≤ 30	-

Tab. 18 Flue gas venting duct length and diaphragm diameter 80+80 - CTFS 9-11-13-15-18

CTFS 24

Air intake

- Minimum permissible length of flue gas venting pipe is 0.5 metre.
- Each wide radius 90° air-intake elbow (R=D) is equivalent to a 1.5 metre long straight pipe section.
- Each narrow radius 90° air-intake elbow (R=D) is equivalent to a 3.0 metre long straight pipe section.
- Every air intake pipe length of one metre is equivalent to a 1 metre long straight pipe section.
- Every split pipe chimney at intake is equivalent to a 7.0 metre long straight pipe section.
- Install the specific air deflector (see Fig. 8 0SDOPPIA13).

WARNING

Install the intake Ø 50 mm diaphragm.

Flue gas vent

- Each wide radius 90° elbow (R=D) in flue gas vent equals to a 1.5 m long straight pipe section.
- Each narrow radius 90° elbow (R<D) in flue gas vent equals to a 2.5 m long straight pipe section.
- Each air intake duct length of one metre is equivalent to a 1 metre long straight pipe section.
- Every split pipe chimney at glue gas vent is equivalent to a 5.5 metre long straight pipe section.

Use the diaphragms supplied with the boiler.

Pipe length (m)	Flue gas venting diaphragm diameter
1 ≤ L ≤ 9	Ø 49
9 < L ≤ 16	-

Tab. 19 Flue gas venting duct length and diaphragm diameter 80+80 - CTFS 24

The illustrations are indicative only. When installing accessories, refer to the instructions supplied with the accessories themselves.

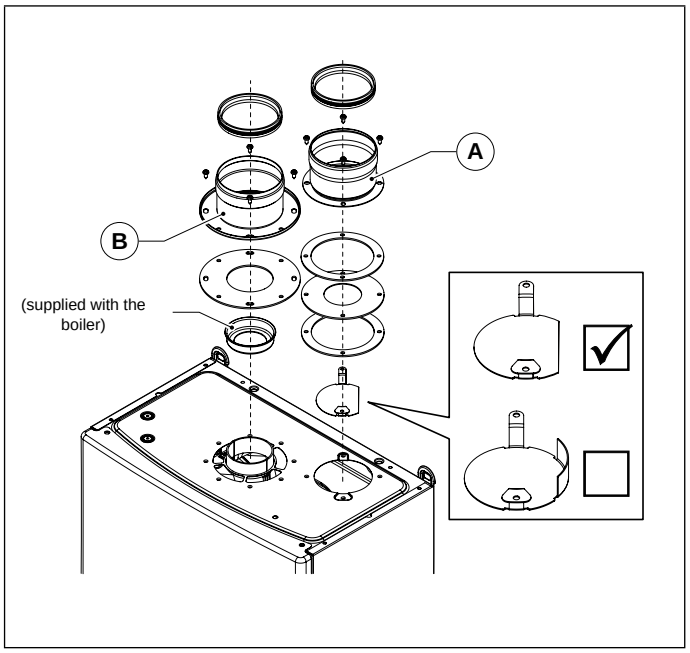

Fig. 8 0SDOPPIA13

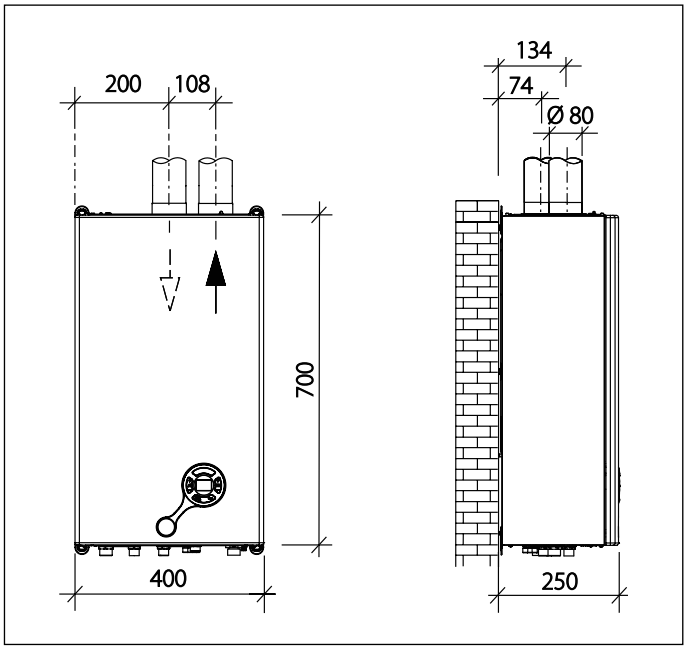

Fig. 9 Dimensions for split pipes

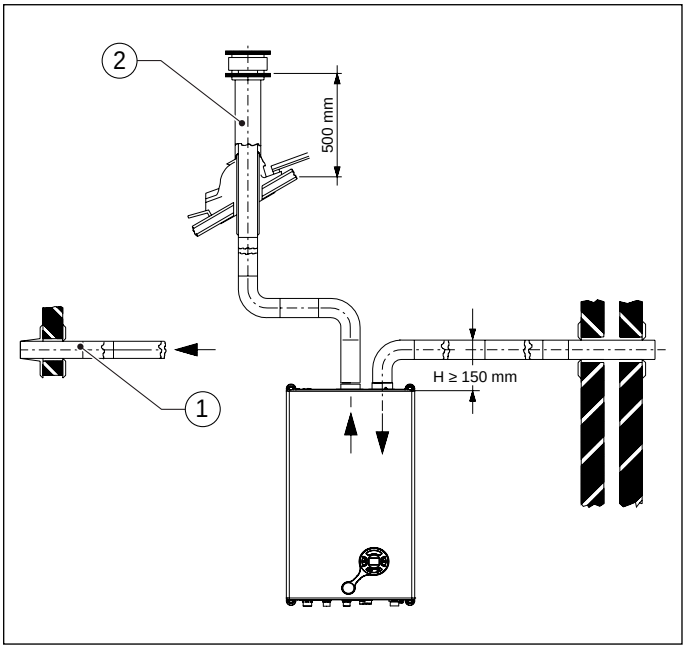

Fig. 10 Air intake and flue gas venting examples

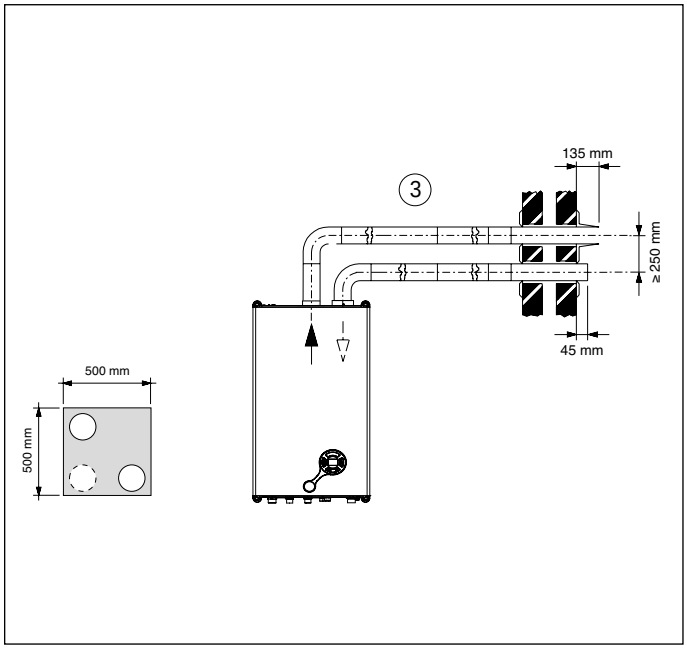

Fig. 11 Air intake and flue gas venting example

Example 1. . . . . Primary air intake and flue gas venting via two opposite external perimeter walls.
Example 2. . . . . Primary air intake via perimeter wall and flue gas vent on roof.
Example 3. . . . . Primary air intake via perimeter wall and flue gas vent via same external perimeter wall.

3.6.4 Installation type: C62

CTFS 9 - 11 - 13 - 15 - 18

- Maximum chimney residual head (intake-venting): 61.5 Pa.
- The maximum allowed temperature of the combustion air is of 70° C.
- The maximum nominal operating temperature of the combustion products is of 150° C.
- The exhaust gas temperature is 150° C.
- Maximum flue gas recirculation: 10%.
- Avoid condensate build-up inside the equipment.
- The intake and discharge pipes can not be installed on opposed walls.

CTFS 24

- Maximum chimney residual head (intake-venting): 40 Pa.
- The maximum allowed temperature of the combustion air is of 70° C.
- The maximum nominal operating temperature of the combustion products is of 150° C.
- The exhaust gas temperature is 150° C.
- Maximum flue gas recirculation: 10%.
- Avoid condensate build-up inside the equipment.
- The intake and discharge pipes can not be installed on opposed walls.

3.7 Checking combustion efficiency

3.7.1 Flue cleaning function

- The boiler features a flue cleaning function which must be used to measure combustion efficiency during operation and to adjust the burner.
- To activate the flue cleaning function, press and hold the buttons **- DHW** and **RESET** simultaneously for 5 seconds. The current to modulation coil (in mA) and the symbol are shown on the LCD.
- When the flue cleaning function is activated with the boiler in "WINTER" or "CH ONLY" mode, the boiler performs the ignition sequence and then operates at a fixed power output.
- To exit the flue cleaning mode, press “Reset” or wait 15 minutes.

3.7.2 Measurement procedure

Coaxial duct system

In order to verify combustion efficiency the following measurements must be implemented:

- assess combustion air temperature from opening 1 (see ref. (A) Fig. 12 Examples of flue gas testing points , for sealed chamber boilers provided with pipes with preset holes).
- assess flue gas temperature and CO2 quantity from no. 2 opening (see ref. (A) Fig. 12 Examples of flue gas testing points , for sealed chamber boilers provided with pipes with preset holes).

Carry out specific measurements when the boiler has stabilised.

Split ducts system

In order to verify combustion efficiency the following measurements must be implemented:

- assess combustion air temperature from opening 2 (see ref. (B) Fig. 12 Examples of flue gas testing points , for sealed chambers provided with pipes with preset holes).
- assess flue gas temperature and CO2 quantity from no. 1 opening (see ref. (B) Fig. 12 Examples of flue gas testing points , for sealed chamber boilers provided with pipes with preset holes).

Carry out specific measurements when the boiler has stabilised.

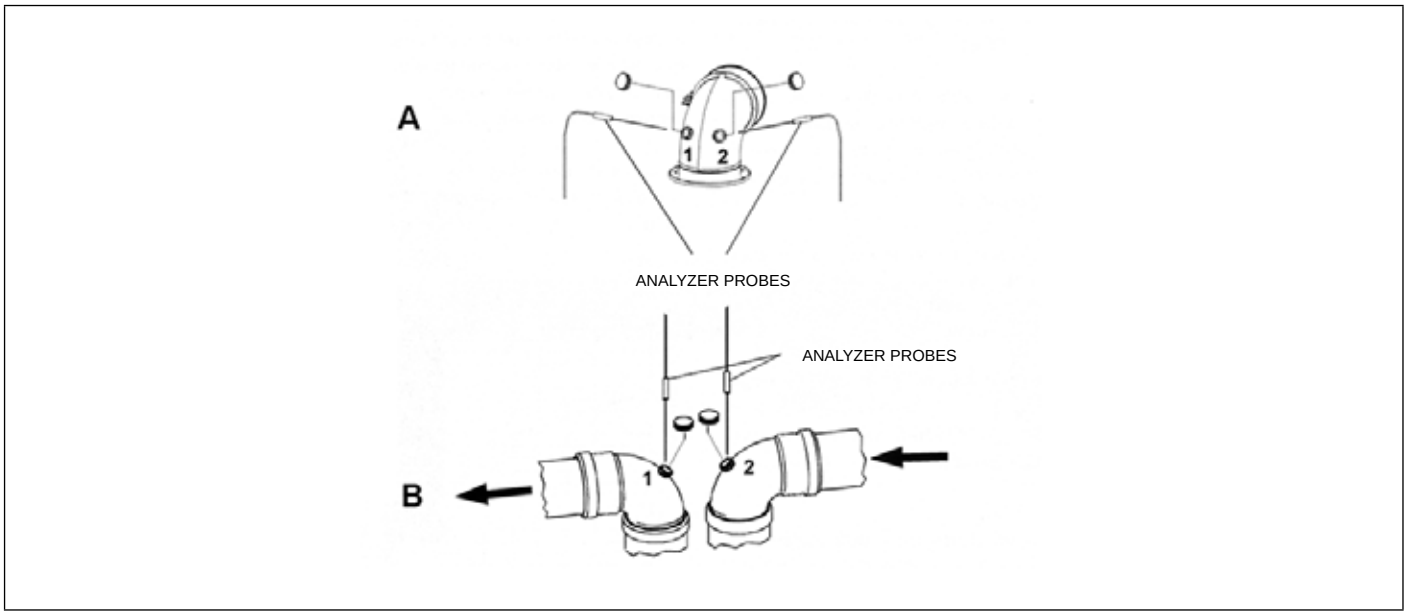

Fig. 12 Examples of flue gas testing points

3.8 Connection to gas mains

DANGER

Before connecting the boiler to the gas mains, make sure that the gas type and the supply conditions correspond to the specifications on the boiler technical data plate.
If this is not the case, do not connect the boiler to the gas mains.

Cross-section gas pipe size must be chosen depending on its length, layout pattern, gas flow rate.
Gas supply pipe cross-section must be equal or greater than boiler gas pipe.

DANGER

Comply with installation standards enforced in the country where the boiler is installed which are considered as fully transcribed in this booklet.
Remember that before operating an indoor gas distribution system and before connecting it to a meter, it must be checked for leaks.
If some system parts are not visible, the leak test is to be carried out before the pipes are covered.
Leak test is NOT to be carried out employing flammable gas: use air or nitrogen for this purpose.
Once gas is in the pipes, leak test by a naked flame is forbidden; use specific products available on the market.
When connecting the boiler to gas supply network, it is COMPULSORY to install an appropriately sized gasket (A) made from suitable material (see Fig. 13 Connection to gas mains).
The boiler gas inlet coupling is NOT suitable for hemp, teflon tape or similarly made gaskets.

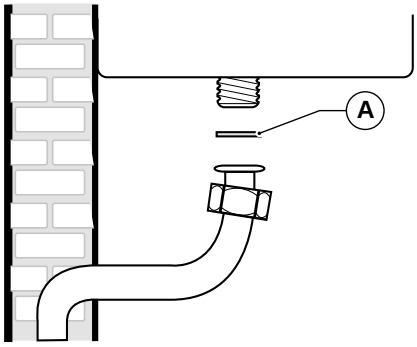

Fig. 13 Connection to gas mains

3.9 Hydraulic connections

3.9.1 Central heating

Prior to installing the boiler, the hydraulic system is to be cleaned in order to remove impurities; they could be present in system components and damage the pump and the heat exchanger.
The CH outlet and return pipes must be connected to the respective 3/4” connectors **M** and **R** on the boiler (see Fig. 5 Paper template).
When calculating the cross section of CH system pipes, bear in mind load losses induced by radiators, thermostatic valves, radiator gate valves, and the configuration of the system itself.

WARNING

As for water treating in the domestic heating systems in order to optimise efficiency and safety, ensure a long life, trouble-free operation of auxiliary equipment, minimise power consumption, thereby integrating the standards and rules in force in the country of installation, it is recommended to use specific products suitable for multi-metal heating systems.

Water pH value must be between 7 and 8.

WARNING

It is advisable to convey the discharge flow of boiler safety valve to the sewer system. Should the above precaution not be implemented and the safety valve be activated, boiler room flooding may occur.

The manufacturer shall not be held responsible in case of damage to people, animals, or property due to failure to follow the above mentioned instructions.

3.9.2 DHW

Prior to installing the boiler, the hydraulic system is to be cleaned in order to remove impurities; they could be present in system components and damage the pump and the heat exchanger.

Cold water inlet and DHW outlet shall be connected to the boiler through the dedicated 1/2" **F** and **C** fittings (see Fig. 5 Paper template).

Hardness of water supplied to the boiler may increase the plate heat exchanger cleaning/replacement intervals.

WARNING

Depending on the hardness of the mains water supply, ascertain whether or not to install appropriate domestic water treatment systems using water treatment products suitable for drinking water and compliant with the regulations and standards in force in the country of installation.

Water treatment is always advisable when water supplied to the boiler has a hardness that is more than 15°F.

Water supplied by commonly marketed water softeners could, due to the chemical and physical characteristics that it takes, not be compatible with some heating system components as the loading of the system is done with DHW system water.

For this reason it is better to use polyphosphate feeders.

3.10 Connection to electrical mains

The boiler is supplied with a three-poled power cable, already connected to the electronic board and it is provided with a safety clamp.

The boiler is to be connected to a 230V-50Hz electrical power supply.

When connecting it to power mains, follow correct phase / neutral polarity sequence.

Installation standards must be complied with and they are herein considered as entirely transcribed.

An easily accessible two-poled switch, with a minimum 3 mm distance between contacts, is to be installed ahead of the boiler. The switch is to allow power supply cut-off in order to safely perform maintenance and service procedures.

Power supply to the boiler must be fitted with a residual-current circuit breaker having suitable disconnection capacity. Electric power supply must be properly earthed.

The above mentioned safety measure must be verified. If in doubt, ask a qualified technician to thoroughly check the power network.

WARNING

The manufacturer cannot be held responsible for any damage caused by failure to earth the system correctly: gas, water, or CH system pipes are not suitable for grounding power networks.

3.11 Connection to ambient thermostat (optional)

The boiler is designed to be connected to an ambient thermostat (optional, not compulsory).
Ambient thermostat contacts must be properly sized in compliance with a load of 4 mA at 20 Vdc.
The ambient thermostat cables must be connected to terminals (3) and (4) of the electronic board (see *Wiring diagram* on page *44*) after eliminating the jumper supplied as a standard with the boiler.
The ambient thermostat cables are not to be grouped together in the same sheath as power mains supply cables.

3.12 Room temperature installation

The boiler can be connected to sensor for room temperature measurement (supplied as standard).
If an ambient probe is installed, the external probe cannot be installed

WARNING

Only original ambient temperature probes supplied by the manufacturer must be used.
If non-original ambient temperature probes are used, correct operation of the boiler and ambient probe cannot be guaranteed.

The room temperature sensor must be connected by means of a double insulated wire, minimum cross-section 0.35 mm².
The ambient probe must be connected to terminals (1) and (2) of boiler electronic board.

WARNING

The ambient temperature probe cables must NOT be routed together with power cables.

If the room temperature sensor installed, the parameter **P21** must be set to 1 while terminals (3) and (4) of the electronic board must be short-circuited.
To install the ambient probe refer to the instructions attached to the probe.
The ambient probe must be installed on an indoor wall at a height of approximately 1.5 m from the floor and in a suitable location for measuring ambient temperature: do not install in recess or corners, behind doors or curtains, and install away from heat sources, direct sunlight, air draughts and water sprays.
The ambient probe automatically modifies the CH flow temperature in relation to:

- Measured ambient temperature.
- Selected ambient temperature.

The ambient temperature is set using **+/- CH** buttons that, with ambient probe installed, no longer work to set the heating water temperature.
Through boiler parameter **P43** it is possible to display the value of the ambient temperature detected by the probe.

3.13 Installation of the (optional) external probe and sliding temperature operation

The boiler can be connected to an (optional) external temperature probe (optional, provided by the manufacturer) for sliding temperature operation.
If an external probe is installed, the ambient probe cannot be installed

WARNING

Only original external temperature probes supplied by the manufacturer must be used.
If non-original external temperature probes are used, correct operation of the boiler and external probe cannot be guaranteed.

The external temperature probe must be connected by means of a double insulated wire, minimum cross-section 0.35 sq.mm.
The external probe must be connected to terminals (1) and (2) of boiler electronic board.

WARNING

The temperature probe cables must NOT be routed together with power cables.

The temperature probe must be installed on an outside wall facing NORTH - NORTH EAST, in a position protected from weather.
Do not install near a window, ventilation openings or sources of heat.
The external temperature probe automatically modifies the CH flow temperature in relation to:

- Measured external temperature.
- Selected thermoregulation curve.
- Selected fictitious ambient temperature.

The thermoregulation curve is selected via parameter **P10**.
During adjustment, the set value will flash on LCD.

The fictitious ambient temperature is set using **CH +/-** buttons that, with external probe installed, no longer work to set the heating water temperature (see *Operation with external probe (optional)* on page *13*).
Through boiler parameter **P29** it is possible to display the value of the outside temperature detected by the external probe.

The figure shows the curves for a fictitious ambient temperature of 20°C.Parameter **P10** allows selecting the curve value shown (see Fig. 14 Thermoregulation curves).
If fictitious ambient temperature value is edited on boiler display, the curves shift up or down, respectively, by the same amount.
With a fictitious ambient temperature setting of 20°C, for example, if you select the curve corresponding to parameter 1 and the outdoor temperature is - 4°C, the CH flow temperature will be 50°C.

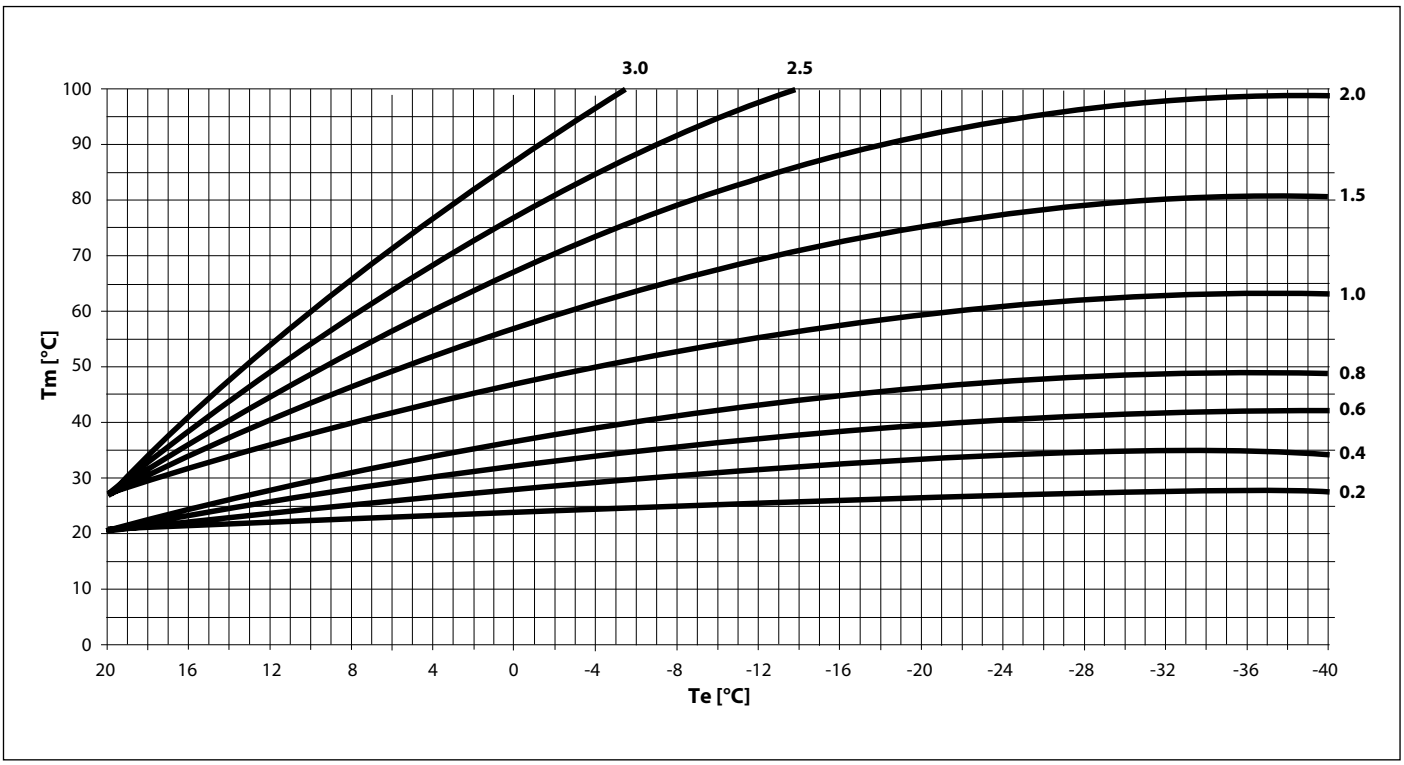

Fig. 14 Thermoregulation curves

Tm indicates flow water temperature in °C
Te indicates external temperature in °C

3.14 TSP parameters

The boiler operation is controlled by several parameters.
To display the parameters, press and hold the buttons **+ DHW** and **- DHW** simultaneously for 3 seconds.
The LCD display alternates the parameter number every 3 seconds (e.g. P03) with the parameter value (e.g. 01).
Scroll through the parameters by pressing **+/- DHW** buttons.
To quit the parameter viewing mode press the **Reset** button.

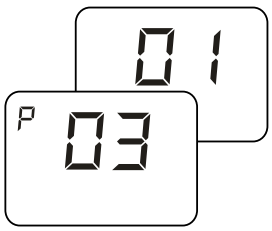

To change parameters, press the **Reset** and **- HEATING** buttons together for 3 seconds.
The LCD display alternates the parameter number every 3 seconds (e.g. P03) with the parameter value (e.g. 01).
Scroll through the parameters by pressing **CH +/-** buttons.
As soon as you reach the one to be modified, press **Select operating status**.
The symbol turns on to indicate that you can edit the parameter value.
The parameter value can be changed with the **+/- HEATING** buttons.
To confirm modification press **Select operating status** button.
To quit the parameter editing mode press the **Reset** button.

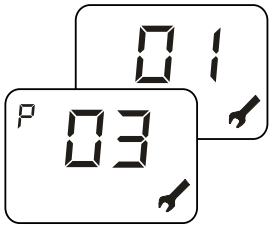

Parameter	Description	Configurable value range	Default values	Notes
P0	Fuel gas type	0, 1	According to the model	0 = natural gas 1 = lpg
P1	Maximum current to modulation coil in heating mode	20 - 180 mA	According to the model	See Adaptation to other gas types and burner adjustment
P2	Ignition power setting	0 ÷ 100%	0%	If P2=0, ignition ramping is implemented. If P2≠0, the boiler operates at the power set (P2=1 minimum power ÷ P2=100 maximum power)
P3	Heating thermostat timing	0 ÷ 99 min.	4 min.	n.a.
P4	CH power rising ramp timer	0 ÷ 30 min.	4 min.	n.a.
P5	Timer for CH post-circulation, freeze protection and flue cleaning function	0 ÷ 199 sec.	30 sec.	n.a.
P6	Setting of "solar" DHW thermostats	0 ÷ 1	0	0 = normal; 1 = solar
P7	Water hammer protection delay, configurable	0 ÷ 10 sec.	0 sec.	n.a.
P8	Ambient thermostat reading delay	0 ÷ 199 sec.	0 sec.	n.a.
P9	Boiler type selection	0 ÷ 2	2	0.1 = other; 2 = mono-thermal
P10	Heating output curves	0,0 ÷ 3,0	1,5	resolution 0.1 (only with connected external probe)
P11	mono-thermal boiler type selection	1 ÷ 3	1	1= combined instantaneous, plates, 2=CH only, 3 = water heater
P12	Heating timer reset temperature	25 ÷ 78 °C	30 °C	n.a.
P13	Maximum ΔT between flow and return	0 ÷ 78 K	30 K	0 = function disabled
P14	Default parameters set (except for P0, P9)	0 ÷ 1	0	0 = user's parameters 1 = default parameters

Tab. 20 Limits to be set for TSP parameters and default values in relation to boiler type (TSP0) - I

Parameter	Description	Configurable value range	Default values	Notes
P15	Ambient probe triggering differential OFF	0.0 ÷ 1.0 °C	0.0 °C	resolution 0.1 (only with connected ambient probe)
P16	Ambient probe triggering differential ON	0.1 ÷ 1.0 °C	0.5 °C	resolution 0.1 (only with connected ambient probe)
P17	Ambient probe correction range	0.0 ÷ 10.0 °C	5 °C	resolution 0.1 (only with connected ambient probe)
P18	Type of modulation with connected ambient probes	0 ÷ 1	1	0 = on/off; 1 = ambient probe modulation
P19	Flow temperature with P18=0 and P21=01	30 ÷ 78 °C	60 °C	only with connected ambient probe
P20	Type of temperature visualization on display	0 ÷ 2	0	0 = flow temperature 1 = ambient/external probe temperature 2 = return temperature
P21	Additional inlet matching	0 ÷ 2	0	0 = no probe; 1 = ambient probe; 2 = external probe
P22	Anti-seize function timer	0 ÷ 180 sec.	10 sec.	n.a.
P23	Anti-legionella function timer	0 ÷ 199 days	15 days	n.a.
P24	Anti-legionella function temperature	35 ÷ 70 °C	65 °C	n.a.
P25	Anti-legionella function execution timer	1 ÷ 199 min.	30 min.	n.a.
P26	Display of flow temperature	n.a.	n.a.	n.a.
P27	Return temperature displaying	n.a.	n.a.	n.a.
P28	DHW temperature displaying	n.a.	n.a.	n.a.
P29	Ambient or external temperature display	n.a.	n.a.	only with connected ambient or external probe
P30	Display of boiler type	n.a.	According to the model	C = forced draught B = natural draught
P31	Display of most recent boiler shut-down	n.a.	Fault code	n.a.
P32	Display of penultimate boiler shut-down	n.a.	Fault code	n.a.
P33	Display of third last boiler shut-down	n.a.	Fault code	n.a.
P34	Display of fourth last boiler shut-down	n.a.	Fault code	n.a.
P35	Display of fifth last boiler shut-down	n.a.	Fault code	n.a.
P36	Display of reset shut-down and fault	0 ÷ 1	n.a.	0 = OFF 1 = shut-downs and faults reset
P37	Number of faults since last reset	n.a.	n.a.	n.a.
P38	Modulation percentage indication	n.a.	n.a.	0 ÷ 100%
P39	Board use month displaying	n.a.	n.a.	n.a.

Tab. 21 Limits to be set for TSP parameters and default values in relation to boiler type (TSP0) - II

3.15 Filling the system

Once all boiler connections have been completed, CH system can be filled.
The procedure is to be cautiously carried out, following each step:

- Open the bleeding valves on all radiators and verify the boiler automatic valve operation.
- Gradually open the relevant filler cock, checking any automatic bleeding valves installed in the system properly work (see Fig. 2 Filler cock).
- Close all radiator bleeding valves as soon as water starts coming out.
- Check on pressure gauge that water pressure reaches the 1÷1.3 bar reading.
- Shut the filler cock and bleed any air out again, by opening the air bleeding valves on radiators.
- Start the boiler and bring the system to working temperature, stop the pump, and repeat air bleeding procedure.
- Allow the system to cool and restore water pressure to 1÷1.3 bars.

WARNING

As for water treating in the domestic heating systems in order to optimise efficiency and safety, ensure a long life, trouble-free operation of auxiliary equipment, minimise power consumption, thereby integrating the standards and rules in force in the country of installation, it is recommended to use specific products suitable for multi-metal heating systems.
Water pH value must be between 7 and 8.

WARNING

After long inactivity of the boiler, its pump may be stuck.
Before starting up the boiler, make sure that the pump is operating, with the following procedure:

- **Remove the boiler outer casing.**
- **Unscrew the protective cap at the centre of the pump motor.**
- **When the protection cap is removed, some water may flow out.**
- **Put a screwdriver into the hole and manually rotate the circulation pump shaft clockwise.**
- **Before refitting the boiler casing ensure that all surfaces are properly dried.**
- **Once the unblocking operation is completed, screw the protective cap back on and check for water leaks.**

WARNING

The low water safety pressure switch will not electrically enable the burner ignition when water pressure is below 0.4-0.6 bar.
The CH system water pressure must not be lower than 1 bar. Otherwise, fill the heating system.
The procedure is to be followed while the system is cold.
Pressure gauge is used to read pressure inside the heating circuit.

3.16 Starting up the boiler

3.16.1 Preliminary checks

Before starting the boiler, check that:

- The flue gas venting duct and the relevant terminal are installed in conformity with the instructions: with the boiler operating, there must be no leakage of combustion by-products from any of the gaskets.
- The supply power to the boiler must be 230 V ~ 50 Hz.
- The heating system is correctly filled with water (pressure gauge reading 1÷1.3 bar).
- Any shut-off cocks in the system pipes are open.
- The mains gas type is correct for the boiler calibration: convert the boiler to the available gas if necessary (see *Adaptation to other gas types and burner adjustment* on page *46*). This operation is to be exclusively carried out by qualified personnel.
- The gas supply cock is open.
- There are no fuel gas leaks.
- The main switch installed adjacent to the boiler is turned on.
- The safety valve is not blocked.
- The 3-bar safety valve is not stuck.
- The 3-bar (CH system) and 7-bar (DHW system) safety valves are not stuck.
- There are no water leaks.
- The pump has not seized.
- The condensate trap installed on the boiler is discharging condensate correctly and is not stuck.

3.16.2 Switching on and switching off

To switch the boiler on and off, refer to the **"Instructions for the User"** (see *Instructions for the user* on page *8*).

3.17 Available head

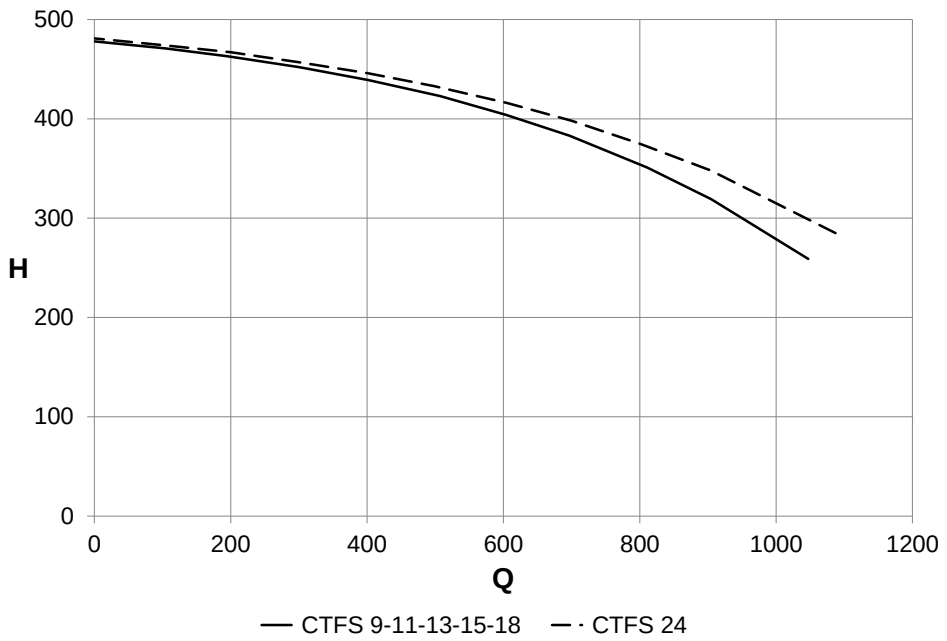

Fig. 15 Available head

Q . . . . . Flow rate (l/h)
H . . . . . Available head (mbar)

3.18 Wiring diagram

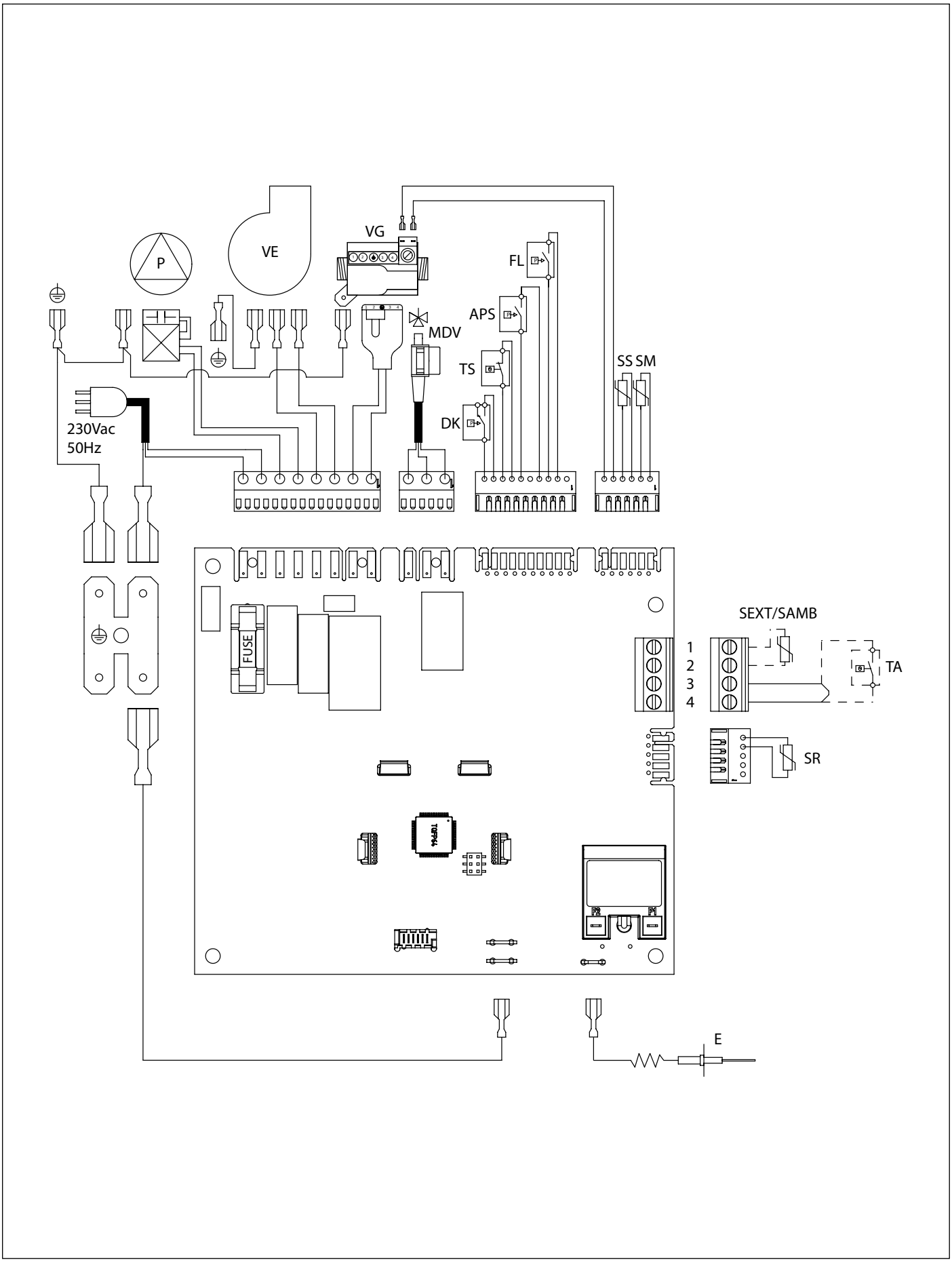

Fig. 16 Wiring diagram

Internal connections

APS : . . . . . air pressure switch
DK : . . . . . low water pressure swich
E : . . . . . ignition/flame detection electrode
FL : . . . . . flow switch
MDV :. . . . . electric deviating valve
P : . . . . . boiler pump
SM : . . . . . CH NTC temperature probe 10k Ohm a 25°C B=3435
SR : . . . . . return NTC probe 10k Ohm at 25 °C B=3435
SS : . . . . . NTC DHW probe 10k Ohm at 25 °C B=3435
VE : . . . . . Fan
VG : . . . . . gas valve
TS : . . . . . Safety thermostat on CH flow

Connections performed by the installer

1-2: . . . . . outdoor temperature probe NTC 10k Ohm at 25 °C B=3977 or ambient NTC probe 10k Ohm at 25°C B=3977 (SEXT/SAMB)
3-4: . . . . . room thermostat (TA)

3.18.1 Relationship between temperature and nominal resistance of all NTC probes (B=3435)

T (°C)	0	2	4	6	8
0	27203	24979	22959	21122	19451
10	17928	16539	15271	14113	13054
20	12084	11196	10382	9634	8948
30	8317	7736	7202	6709	6254
40	5835	5448	5090	4758	4452
50	4168	3904	3660	3433	3222
60	3026	2844	2674	2516	2369
70	2232	2104	1984	1872	1767
80	1670	1578	1492	1412	1336
90	1266	1199	1137	1079	1023

Tab. 22 Relationship between "Temperature and Nominal resistance" for temperature probes

3.19 Adaptation to other gas types and burner adjustment

WARNING

This boiler is built to run on the type of gas specified on the packaging and on the boiler rating plate.
Any later transformation is to be exclusively carried out by qualified personnel, using manufacturer designed accessories and following the procedure and adjustment instructions for an accurate boiler setting-up.

- disconnect the boiler from the electric power supply;
- close the gas cock;
- remove boiler outer front panel;
- loosen the screws securing combustion chamber front panel to frame, then remove panel;
- remove combustion chamber front part;
- disconnect the gas pipe;
- remove the main burner;
- remove nozzles from main burner replacing them by new gas type correct diameter ones;

WARNING

The copper gaskets must be installed.

- reinstall the main burner;
- connect the gas pipe;
- refit the chamber front part, the combustion chamber front panel and the boiler external front panel;
- reconnect boiler to electric power supply, and open the gas cock;
- change **P0** parameter value (see table).
- change **P1** parameter value (see table).
- adjust the gas valve.

Gas	P0
G20	00
G30	01
G31	01

Gas	P1					
	CTFS 9	CTFS 11	CTFS 13	CTFS 15	CTFS 18	CTFS 24
G20	58	66	74	84	120	120
G30	87	99	110	121	170	170
G31	97	109	120	132	170	170

3.19.1 Gas valve setting

Maximum heating output adjustment

- Check the flow pressure value (see *Operating data* on page 20);
- Remove the plastic cover **A** at the top of the modulator coil, protecting the pressure regulator adjuster screws;
- Connect a pressure gauge to the pressure measurement point **IN** to check the input **OUT** and the output pressure;
- Select boiler operating mode "WINTER" or "CH ONLY" by pressing the "Operating mode" button (C) on the control panel.
- To activate the flue cleaning function, press and hold the buttons “info” and “Reset” simultaneously for 3 seconds. The CH flow temperature and the symbol are shown on the LCD display.
- Rotate the brass adjustment nut **B** CLOCKWISE as far as it will go to increase pressure to the nozzles, rotate ANTI-CLOCKWISE to reduce pressure to nozzles;
- For LPG operation, tighten the nut **B** completely in a CLOCKWISE direction.

Minimum heating output adjustment

- Disconnect electrical power from the modulator spindle. **D** ;
- Switch on the burner and check that the "MINIMUM" pressure value matches the value indicated (see *Operating data* on page 20);
- To adjust the pressure, hold the brass nut **B** in place using a 10mm spanner (fig. 23, fig. 24 or fig. 25) and turn the plastic screw **C** CLOCKWISE to increase the pressure, or ANTICLOCKWISE to reduce it;
- Re-connect the electrical wiring to modulation coil.

Final settings

- turn the boiler on and check its correct operation;
- measure the minimum and maximum gas valve pressures again;
- adjust as necessary.
- e-fit the plastic cover **A** on to the screws;
- close gas pressure test points;
- check for gas leaks.

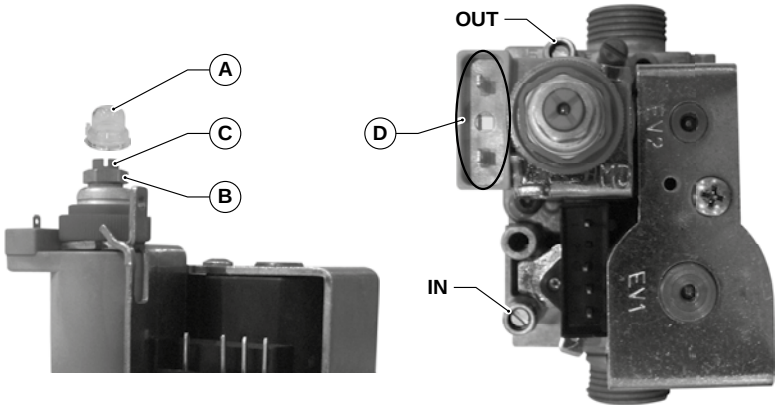

Fig. 17 SIT 845

WARNING

At the end of the adjustment, apply the relevant plate with indication of the new gas type.

4. Testing the boiler

4.1 Preliminary checks

Before testing the boiler, it is recommended to check the following:

- the flue gas venting duct and the relative terminal are installed in conformity with the instructions: **there must be no leakage of combustion by-products from any of the gaskets**.
- the supply power to the boiler must be 230 V ~ 50 Hz;
- the system is correctly filled with water (pressure gauge reading 1 to 1.3 bar);
- any shut-off cocks in the system pipes are open;
- the mains gas type is correct for the boiler calibration: convert the boiler to the available gas when necessary; this operation must only be performed by qualified technical personnel;
- the gas supply cock is open;
- **there are no fuel gas leaks;**
- the main switch installed ahead of the boiler is turned on;
- the 3-bar safety valve is not stuck;
- there are no water leaks;
- the pump has not seized.

WARNING

Should the boiler not be installed in compliance with the prevailing laws and standards, notify the system supervisor and do not test the boiler.

4.2 Switching on and switching off

To switch the boiler on and off, refer to the **“Instructions for the User”**.

5. Maintenance

WARNING

Any maintenance (and repair) work must only be carried out by qualified personnel.

The user is strongly advised to have the product serviced and repaired by a service centre or qualified personnel.
Appropriate boiler maintenance ensures efficient operation, environment preservation, and safety for people, animals and objects.

Maintenance operations must be carried out at least once a year.

WARNING

Disconnect electric power supply before starting any maintenance procedure, involving replacement of components and/or cleaning inside parts of boiler.

5.1 Maintenance schedule

Maintenance operations include check and cleaning procedures. In particular:

Inspections and checks

- Check general integrity of the boiler.
- Check boiler and network gas supply for leakage.
- Check gas supply pressure to boiler.
- Check minimum and maximum gas pressures to boiler nozzles.
- Check boiler ignition sequence.
- Check the condition and seal integrity of the flue gas venting ducts.
- Check air pressure switch operation.
- Check integrity of safety devices of the boiler in general.
- Check for water leaks and oxidised areas on the boiler's couplings.
- Check efficiency of the system safety valve.
- Check expansion vessel filling pressure.
- Check water pressure switch efficiency.

The following cleaning is to be done

- Clean the general interior of the boiler.
- Clean the gas nozzles.
- Clean the air intake and flue gas venting circuits.
- Clean the heat exchanger.

When checking the boiler for the very first time, also verify:

- Boiler room suitability.
- Diameter and length of flue gas system ducts.
- Boiler installation in accordance to this "Installation use and maintenance" manual instructions.

WARNING

Should the boiler not operate correctly, while not posing danger to people, animals or property, notify the system supervisor both verbally and in writing.

5.2 Combustion analysis

The combustion parameters of the boiler, which have to be checked in order to determine efficiency and emissions, must be measured in compliance with applicable legislation and standards.

6. Malfunctions, possible causes and solutions

6.1 Troubleshooting

BOILER STATUS	MALFUNCTION	PROBABLE CAUSE	USER'S TASKS	QUALIFIED PERSONNEL'S TASKS
E01*	Burner does not ignite.	Gas supply failure.	Check gas supply. Check gas supply cock or gas network safety valve intervention.	
		Gas valve is disconnected.	Contact qualified personnel	Reconnect it.
		Gas valve is faulty.	Contact qualified personnel	Replace it.
		The board is faulty.	Contact qualified personnel	Replace it.
	Burner does not ignite: no spark.	Ignition/detection electrode faulty.	Contact qualified personnel	Replace the electrode.
		Electronic board does not ignite. It is faulty.	Contact qualified personnel	Replace electronic board.
	Burner ignites for a few seconds and goes off.	Electronic board does not detect flame: inverted phase and neutral.	Contact qualified personnel	Verify correct neutral and phase connection.
		Ignition/detection electrode wire is interrupted.	Contact qualified personnel	Reconnect or replace wire.
		Ignition/detection electrode faulty.	Contact qualified personnel	Replace the electrode.
		Electronic board does not detect flame: it is faulty.	Contact qualified personnel	Replace electronic board.
		Ignition heat input setting is too low.	Contact qualified personnel	Increase it.
		Minimum heat input is not set correctly.	Contact qualified personnel	Check burner setting.
E02*	Flow temperature exceeded the max. allowed value.	CH water does not flow in the system: pipes might be clogged, thermostatic valves might have shut, system stopcocks might be closed.	Contact qualified personnel	Check system status.
		Circulation pump is blocked or faulty.	Contact qualified personnel	Check the circulation pump.

BOILER STATUS	MALFUNCTION	PROBABLE CAUSE	USER'S TASKS	QUALIFIED PERSONNEL'S TASKS
E03*	Flue gas pressure switch is not operating.	Flue gas exhaust pressure switch is faulty	Contact qualified personnel	Check pressure switch: replace it if faulty.
		The silicone pipes are disconnected or damaged.	Contact qualified personnel	Connect or replace silicone pipes
		Air intake or flue gas vent flow is not correct.	Contact qualified personnel	Check air intake/flue gas venting ducts: clean or replace if necessary.
		Fan is faulty.	Contact qualified personnel	Replace it.
E04**	CH system water pressure is low.	The system is leaking.	Check system.	
		Water pressure switch is disconnected.	Contact qualified personnel	Reconnect it.
		Water pressure switch is not operating: it is faulty.	Contact qualified personnel	Replace it.
E05**	Flow probe not working.	Probe is disconnected.	Contact qualified personnel	Reconnect it.
		Probe is faulty.	Contact qualified personnel	Replace it.
E06**	DHW probe is not working.	Probe is disconnected.	Contact qualified personnel	Reconnect it.
		Probe is faulty.	Contact qualified personnel	Replace it.
E15**	The return probe is not working.	Probe is disconnected.	Contact qualified personnel	Reconnect it.
		Probe is faulty.	Contact qualified personnel	Replace it.
Boiler is not supplying DHW.	DHW flow switch is not working.	System insufficient pressure or flow rate.	Contact qualified personnel	Check DHW system.
				Check DHW flow switch filter.
		DHW flow switch probe is faulty or disconnected.	Contact qualified personnel	Replace or reconnect it.
		DHW flow switch is blocked.	Contact qualified personnel	Replace it.
E44**	The ambient probe is not working.	Probe is disconnected.	Contact qualified personnel	Reconnect it.
		Probe is faulty.	Contact qualified personnel	Replace it.

BOILER STATUS	MALFUNCTION	PROBABLE CAUSE	USER'S TASKS	QUALIFIED PERSONNEL'S TASKS
E72**	Boiler does not recognise if it is of the B or C type.	Flue gas exhaust pressure switch is faulty	Contact qualified personnel	Check flue gas pressure switch: replace it if faulty.
		The wires connecting the flue gas pressure switch to the boiler card are damaged or interrupted.	Contact qualified personnel	Reconnect or replace wirings.
		Air intake or flue gas vent flow is not correct.	Contact qualified personnel	Check air intake/flue gas venting ducts: clean or replace if necessary.
E76**	Gas valve modulation coil is not working.	Electronic board and gas valve link is electrically disconnected or faulty.	Contact qualified personnel	Check connection to the gas valve.
		Gas valve modulation coil is faulty.	Contact qualified personnel	Replace gas valve modulation coil.
E78*	Flow temperature increases too quickly.	Pump is seized.	Contact qualified personnel	Unseize the pump.
		Pump is faulty.	Contact qualified personnel	Replace the pump.

(*) errors that can be reset bythe user, press and hold **RESET**.
(**) self-resettable errors, they automatically reset as soon as the failure is fixed.
In case of errors **E22**, **E42**, **E75** and **E77** contact a service centre or qualified personnel.

Page left intentionally blank

Page left intentionally blank

Page left intentionally blank

0 L I B M C E N 6 5

Fondital S.p.A. Società a unico socio
25079 VOBARNO (Brescia) Italy - Via Cerreto, 40
Tel. +39 0365/878.31
Fax +39 0365/878.304
e mail: info@fondital.it
www.fondital.com

The manufacturer reserves the right to modify his/her products as deemed necessary, without altering the basic characteristics of the products themselves.

Uff. Pubblicità Fondital IST 03 C 970 - 04 | Dicembre 2018 (12/2018)